burkert
FLUID CONTROL SYSTEMS



Servo-assisted 2/2-way diaphragm valve

- Servo-assisted diaphragm with diameter of up to DN 50
- Hard-coupled diaphragm opens without differential pressure
- Vibration-proof, block screwed coil system
- Damped design for quiet closing
- Energy-saving power reduction in all DC versions

Type 0290 can be combined with...

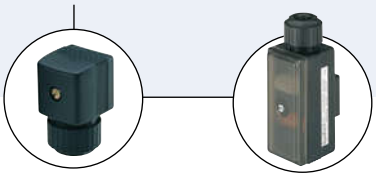

Type 2508
Cable plug

Type 1078
Timer unit
(only for AC version)

The 0290 valve is a servo-assisted solenoid valve of the S.EV series. The valve opens without differential pressure. The opening process is supported by the fixed coupling of the diaphragm to the plunger . In the process, the integrated 'soft-kick' function opens in a manner that is gentle on the material. Various diaphragm material combinations are available depending on the application. The housing offered is rounded out by a stainless steel and grey cast iron version. The solenoid coils are moulded with a chemically resistant epoxy. 'Kick and drop' electronics are moulded into all DC variants for reduced electrical power consumption. In combination with a plug in accordance with DIN EN 17301-803 Form A, the valves satisfy protection class IP65 – in combination with a stainless steel housing NEMA 4X.

Circuit function A

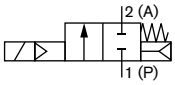

2/2 way servo-controlled solenoid valve, normally closed

Technical data	
Orifice	DN12 - 50 mm
Body material	Brass, stainless steel 1.4581
Coil material	Epoxy
Coil insulation class	H
Internal parts of valve	Brass, stainless steel 1.4105, 1.4301
Seal material	NBR, FKM, EPDM
Media NBR FKM EPDM	 Neutral media, compressed air, water, hydraulic oil Per-solutions, hot oils Oil and fat-free media, e.g., hot water
Media temperature[1)] NBR FKM EPDM	 -10 to +80 °C 0 to +120 °C - 30 to +120 °C
Ambient temperature	Max. +55 °C
Voltage tolerance	±10%
Duty cycle	100% continuous cycle
Electrical connection	Cable plug for Ø 7 mm cable, acc. to DIN EN 175301-803 Form A (supplied as standard)
Protection class	IP65 with cable plug
Installation	As required, preferably with actuator upright

[1)] Max. medium temperature for versions with high power electronics (with coding… /UC) withstands 90°.

DTS 1000024859 EN Version: L Status: RL (released | freigegeben | validé) printed: 06.04.2018

Technical data, *continued*

Orifice [mm]	Kv value water P→A [m³/h]	Port connection A/B and P	Pressure range [bar]	Power consumption				Response times		Weight [kg]
				Inrush AC [VA]	UC [W]	Hold AC [VA/W]	UC [W]	Opening [ms]	Closing [ms]	
12	1.8	G 1/2	0 - 16	100	80	25/10	6	100 to 250	700 to 2000	1.0
20	5.0	G 3/4	0 - 16	120	100	32/16	9			1.4
25	10.0	G 1	0 - 16	120	100	32/16	9			1.8
32	16.0	G 1 1/4	0 - 12	120	100	32/16	9	300 to 1000	700 to 4000	2.7
40	16.0	G 1 1/2	0 - 12	120	100	32/16	9			3.1
50	38.0	G 2	0 - 12	-	30	-	30			6.5

Flow rate Kv value water [m³/h]	measured at +20°C, 1 bar pressure at valve inlet and free outlet
Pressure values [bar]	gauge pressures with respect to the prevailing atmospheric pressure
Response times [ms] Opening Closing	measured with water at valve outlet at 6 bar and +20°C pressure build-up 0 to 90% pressure decay 100 to10%

Material

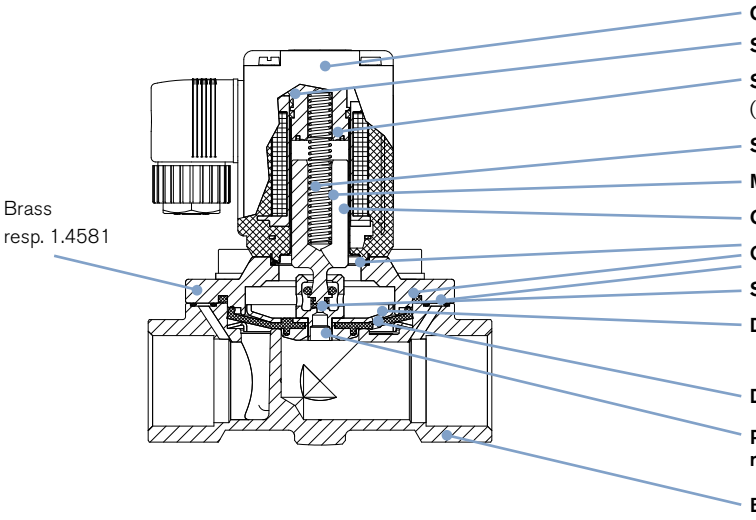

Coil	Epoxy
Stopper	1.4105
Shading ring (only AC version)	Brass version: copper Stainless steel version: silver
Spring	1.4310
Magnetic core	1.4105
Guide tube	1.4303
O- ring	(see ordering chart)
Seat seal	(see ordering chart)
Diaphragm support disc	Brass version: CuZn37 Stainless steel version: 1.4401
Diaphragm	(see ordering chart)
Pilot seat and nippel	Brass version: CuZn39Pb3 Stainless steel version: 1.4401
Body	Brass or stainless steel 1.4581

DTS 1000024859 EN Version: L Status: RL (released | freigegeben | validé) printed: 06.04.2018

Dimensions [mm]

Threaded port version

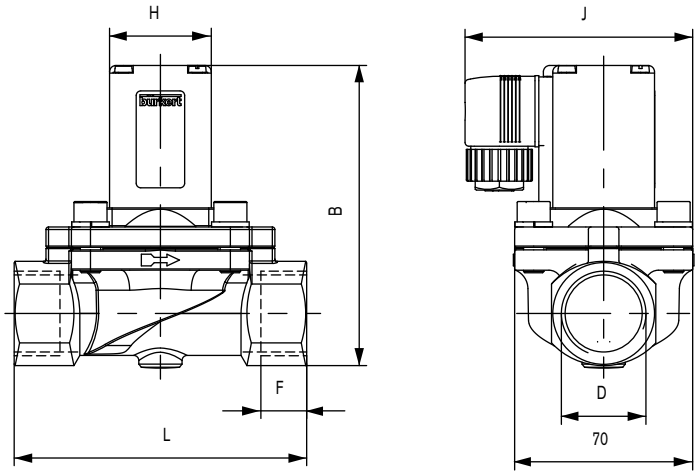

DN	D	B	E	F	H	J	L
12	G 1/2	95.5	40	14	40	73	74.5
20	G 3/4	122	60	16	49	86.5	100
25	G 1	131	70	18	49	91.5	115
32	G 1 1/4	145	85	20	49	99	126
40	G 1 1/2	154	85	22	49	99	126
50	G 2	211	115	24	72	126	164

Flange version acc. to DIN 2501

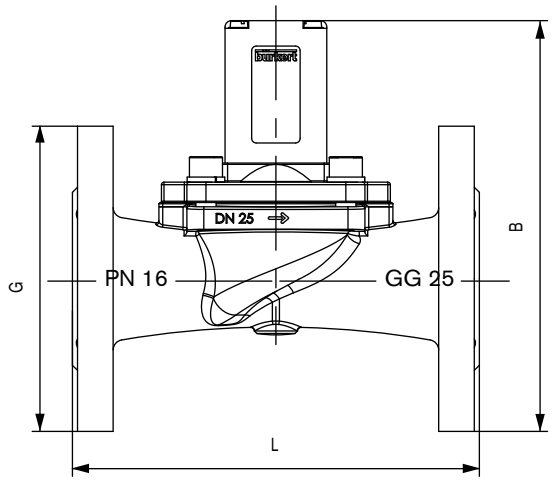

DN	B	G	L
25	175	120	160
32	190	140	180
40	199	150	200
50	259	165	230

DTS 1000024859 EN Version: L Status: RL (released | freigegeben | validé) printed: 06.04.2018

Ordering chart for valves (other versions on request)

Brass and stainless steel body, all valves with cable plugs

Circuit function	Port connection	Orifice	Kv value water [m³/h]	Pressure range [bar]	Diaphragm material	Item no. per voltage/frequency [V/Hz] 024/50	024/UC/DC [1]	230/50	110/50
A 2/2 way servo-controlled solenoid valve, normally closed 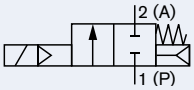	**Brass body**								
	G 1/2	12	1.8	0-16	NBR	043816	050294	044373	049500
					FKM	048707	049229	042886	059240
					EPDM	045931	049050	044816	049055
	G 3/4	20	5.0	0-16	NBR	058766	049518	045292	057127
					FKM	053910	053674	049745	067973
					EPDM	065033	058427	045290	069138
	G 1	25	10.0	0-16	NBR	048171	053675	045293	053869
					FKM	–	066981	058627	–
					EPDM	054245	057155	045291	064887
	G 1 1/4	32	16.0	0-12	NBR	085290	085291	052513	085292
					FKM	–	–	087203	–
					EPDM	–	–	085259	–
	G 1 1/2	40	16.0	0-12	NBR	085294	085295	085297	085296
					FKM	–	–	087663	–
					EPDM	–	–	087732	–
	G 2	50	38.0	0-12	NBR	–	085299 [3]	085301 [2]	085300 [2]
					EPDM	–	–	077494 [2]	–
	Stainless steel body								
	G 1/2	12	1.8	0-16	NBR	043659	053595	043654	052358
					FKM	048708	049987	042888	058407
					EPDM	045765	048606	043553	049053
	G 3/4	20	5.0	0-16	NBR	–	–	065121	–
					FKM	065362	066381	064701	066594
					EPDM	066460	059910	065025	025870
	G 1	25	10.0	0-16	NBR	–	–	065414	–
					FKM	018121	065542	066125	069477
					EPDM	–	018348	059901	–

[1] The coil for UC power supply is provided with an integrated high power elecronic. Please check sufficient power supply (see technical data table on page 2)
[2] The valve is provided with a cable plug with integrated rectifier
[3] Only DC

Further versions on request

Voltage
042/50, 110/50, 240/50

Approvals
UL, UR, CSA

Port connection
Flange connection acc. to DIN 2501 (DN 25-50

DTS 1000024859 EN Version: L Status: RL (released | freigegeben | validé) printed: 06.04.2018

To find your nearest Bürkert facility, click on the orange box → www.burkert.com

In case of special application conditions, please consult for advice.

Subject to alteration.
© Christian Bürkert GmbH & Co. KG

1712/10_EU-en_00891931