Original instructions

Smile Tina

Emergency stop with indication

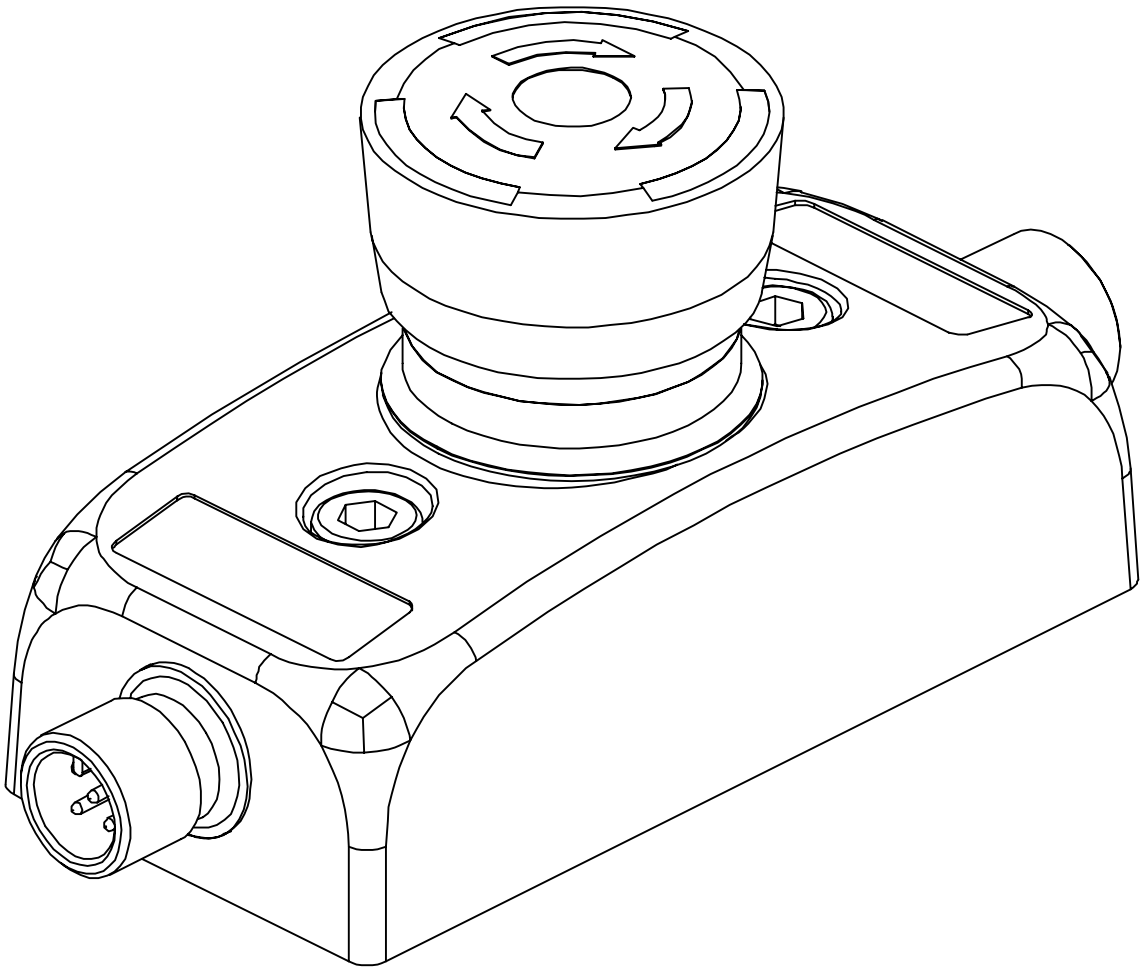

ABB AB / Jokab Safety Varlabergsvägen 11, SE-434 39 Kungsbacka, Sweden
www.abb.com/lowvoltage

Read and understand this document

Please read and understand this document before using the products. Please consult your ABB/JOKAB SAFETY representative if you have any questions or comments.

WARRANTY

ABB/JOKAB SAFETY's exclusive warranty is that the products are free from defects in materials and workmanship for a period of one year (or other period if specified) from date of sale by ABB/JOKAB SAFETY.

ABB/JOKAB SAFETY MAKES NO WARRANTY OR REPRESENTATION, EXPRESSED OR IMPLIED, REGARDING NON-INFRINGEMENT, MERCHANTABILITY, OR FITNESS FOR PARTICULAR PURPOSE OF THE PRODUCTS, ANY BUYER OR USER ACKNOWLEDGES THAT THE BUYER OR USER ALONE HAS DETERMINED THAT THE PRODUCTS WILL SUITABLY MEET THE REQUIREMENTS OR THEIR INTENDED USE. ABB/JOKAB SAFETY DISCLAIMS ALL OTHER WARRANTIES, EXPRESSED OR IMPLIED.

LIMITATIONS OF LIABILITY

ABB/JOKAB SAFETY SHALL NOT BE RESPONSIBLE FOR SPECIAL, INDIRECT, OR CONSEQUENTIAL DAMAGES, LOSS OF PROFITS OR COMMERCIAL LOSS IN ANY WAY CONNECTED WITH THE PRODUCTS, WHETHER SUCH CLAIM IS BASED ON CONTRACT, WARRANTY, NEGLIGENCE, OR STRICT LIABILITY.

In no event shall responsibility of ABB/JOKAB SAFETY for any act exceed the individual price of the product on which liability asserted.

IN NO EVENT SHALL ABB/JOKAB SAFETY BE RESPONSIBLE FOR WARRANTY, REPAIR, OR OTHER CLAIMS REGARDING THE PRODUCTS UNLESS ABB/JOKAB SAFETY'S ANALYSIS CONFIRMS THAT THE PRODUCTS WERE PROPERLY HANDLED, STORED, INSTALLED, AND MAINTAINED AND NOT SUBJECT TO ABUSE, MISUSE, OR INAPPROPRIATE MODIFICATION OR REPAIR.

SUITABILITY FOR USE

ABB/JOKAB SAFETY shall not be responsible for conformity with any standards, codes, or regulations that apply to the combination of products in the customer's application or use of the product. At the customer's request, ABB/JOKAB SAFETY will provide applicable third party certification documents identifying ratings and limitations of use that apply to the products. This information by itself is not sufficient for a complete determination of the suitability of the products in combination with the end product, machine, system, or other application or use.

The following are some examples of applications for which particular attention must be given. This is not intended to be an exhaustive list of all possible uses of the products, nor is it intended to imply that the uses listed may be suitable for the products:

Outdoor use, uses involving potential chemical contamination or electrical interference, or conditions or uses not described in this document.

Nuclear energy control systems, combustion systems, railroad systems, aviation systems, medical equipment, amusement machines, vehicles, and installations subject to separate industry or government regulations.

Systems, machines, and equipment that could present a risk to life or property.

Please know and observe all prohibitions of use applicable to the products.

NEVER USE THE PRODUCTS FOR AN APPLICATION INVOLVING SERIOUS RISK TO LIFE OR PROPERTY WITHOUT ENSURING THAT THE SYSTEM AS A WHOLE HAS BEEN DESIGNED TO ADDRESS THE RISKS, AND THAT THE ABB/JOKAB SAFETY PRODUCT IS PROPERLY RATED AND INSTALLED FOR THE INTENDED USE WITHIN THE OVERALL EQUIPMENT OR SYSTEM.

PERFORMANCE DATA

While every effort has been taken to ensure the accuracy of the information contained in this manual ABB/JOKAB SAFETY cannot accept responsibility for errors or omissions and reserves the right to make changes and improvements without notice. Performance data given in this document is provided as a guide for the user in determining suitability and does not constitute a warranty. It may represent the result of ABB/JOKAB SAFETY'S test conditions, and the users must correlate it to actual application requirements. Actual performance is subject to the ABB/JOKAB SAFETY Warranty and Limitations of Liability.

Table of Contents

1 Introduction 4

Scope 4

Audience 4

Prerequisites 4

Special notes 4

2 Overview 5

General description 5

Safety regulations 5

3 Connections 6

Connection examples 7

4 Installation and maintenance 8

Installation precautions 8

Maintenance 8

Testing of the safety functions 8

Troubleshooting 8

5 Operation 9

LED indication 9

Information output signal attributes 9

6 Model overview 10

7 Technical data 11

Dimensions 12

8 EC Declaration of conformity 13

1 Introduction

Scope

The purpose of these instructions is to describe the emergency stop Smile Tina and to provide the necessary information required for installation and operation.

Audience

This document is intended for authorized installation personnel.

Prerequisites

It is assumed that the reader of this document has knowledge of the following:

- Basic knowledge of ABB/Jokab Safety products.
- Knowledge of machine safety.

Special notes

Pay attention to the following special notes in the document:

⚠ **Warning!**	Danger of severe personal injury! An instruction or procedure which, if not carried out correctly, may result in injury to the technician or other personnel.
Caution!	Danger of damage to the equipment! An instruction or procedure which, if not carried out correctly, may damage the equipment.
NB:	Notes are used to provide important or explanatory information.

2 Overview

General description

In order to fulfil the need for a small and easy to install E-stop, Smile Tina has been developed. The size of the device makes it possible to be installed wherever needed. With M12 connections or cable and centralized mounting holes. Smile Tina is very easy to install, especially on aluminium extrusions. There are three different versions available, either with one or two M12 connections or cable. Two M12 connectors are used to enable the connection of E-stops in series, which is often used with dynamic safety circuits fulfilling PL e according to EN ISO 13849. On the top of the Smile Tina E-stop unit, an LED indicates the actual status according to the dynamic system.

Smile Tina is intended for use in safety circuits in accordance with EN 60204-1.

Smile Tina units are adapted for the dynamic safety circuit and must be connected to either a Vital safety module or Pluto safety-PLC.

⚠ **Warning!** The emergency stop Smile Tina normally needs to be complemented with other safety functions such as interlocking guards etc. Refer to risk analysis.

NB: The emergency stop shall **not** be used as normal stop of the machine, only in case of emergency.

Safety regulations

⚠ **Warning!**

Carefully read through this entire manual before using the device.

The devices shall be installed by a trained electrician following the Safety regulations, standards and the Machine directive.

Failure to comply with instructions, operation that is not in accordance with the use prescribed in these instructions, improper installation or handling of the device can affect the safety of people and the plant.

For installation and prescribed use of the product, the special notes in the instructions must be carefully observed and the technical standards relevant to the application must be considered.

In case of failure to comply with the instructions or standards, especially when tampering with and/or modifying the product, any liability is excluded.

3 Connections

Electrical connections – Smile Tina

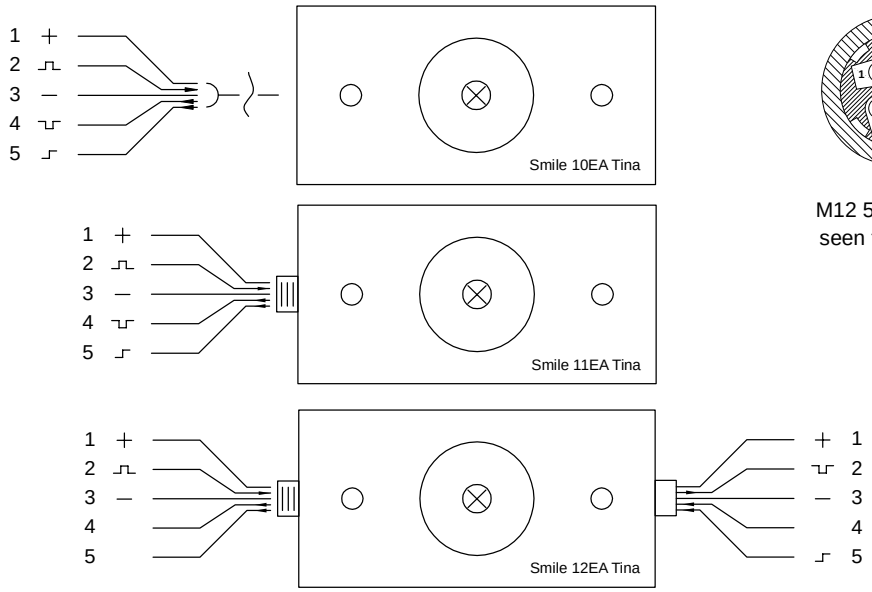

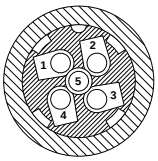

M12 5-pole male seen from cable side

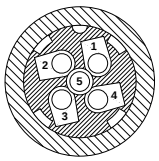

M12 5-pole female seen from cable side

Smile 12EA Tina

Input
M12 5-pole male

1) +24 VDC
2) Dynamic signal input
3) 0 VDC
4) Not used
5) Not used

Output
M12 5-pole female

1) +24 VDC
2) Dynamic signal input
3) 0 VDC
4) Not used
5) Information output

Smile 10EA Tina
5-pole wired

1) Brown: +24 VDC
2) White: Dynamic signal input
3) Blue: 0 VDC
4) Black: Dynamic signal output
5) Grey: Information output

Smile 11EA Tina
M12 5-pole male

1) +24 VDC
2) Dynamic signal input
3) 0 VDC
4) Dynamic signal output
5) Information output

NB: Shielded cable is recommended between this unit and the rest of the safety circuits.

⚠ **Warning!** The information channel output shall **never** be used for the safety purpose(s).

Connection examples

Connection example – Smile 12EA Tina

Three Smile 12 EA Tina connected in series to Vital safety monitor or Pluto safety-PLC.

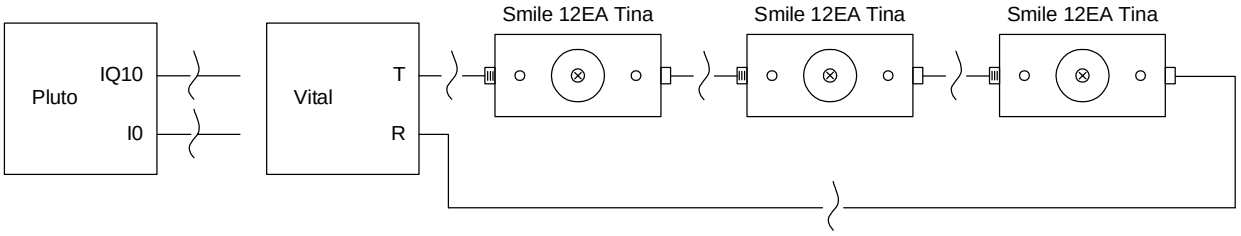

Connection example – Smile 11EA Tina

Three Smile 11EA Tina connected in series to Vital safety module or Pluto safety-PLC through connection terminals in the electrical cabinet.

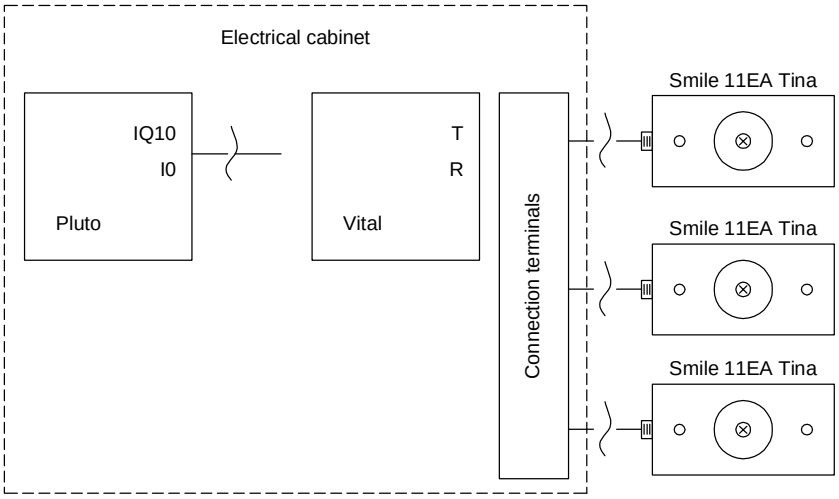

Connection example – Smile 11EA Tina and Eden

Three Smile 11EA Tina and one Eden connected in series to Vital safety module or Pluto safety-PLC through the connection block Tina 4A.

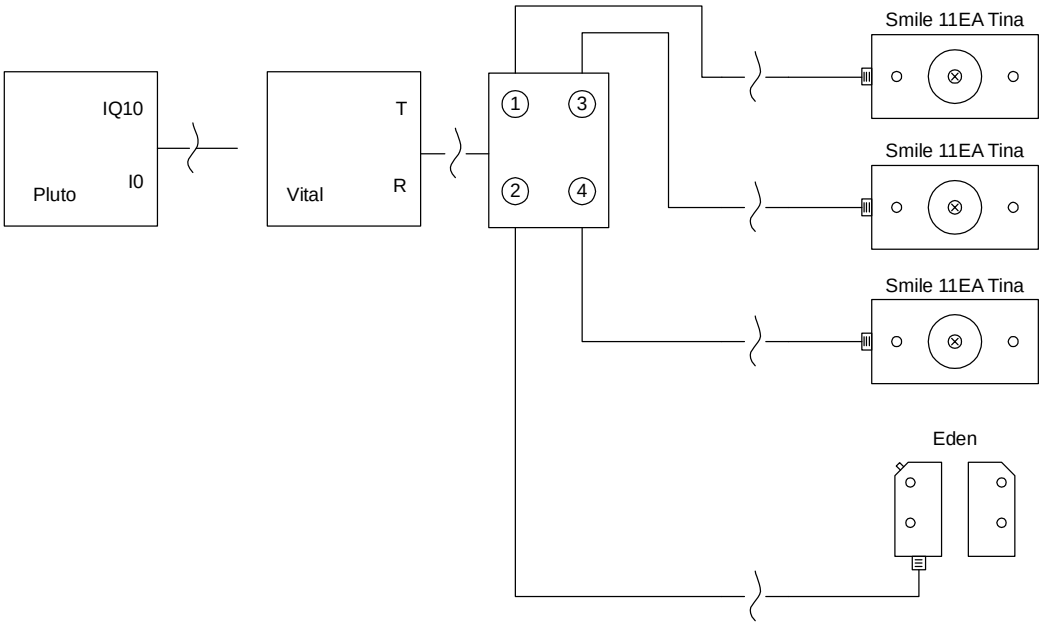

4 Installation and maintenance

Installation precautions

First mount Smile Tina to the surface with two M5 bolts, and then attach the M12 connection(s).

⚠ **Warning!** All the safety functions must be tested before starting up the system.

Maintenance

⚠ **Warning!**

The safety functions and the mechanics shall be tested regularly, at least once every year to confirm that all the safety functions are working properly (EN 62061:2005).

In case of breakdown or damage to the product, contact the nearest ABB/Jokab Safety Service Office or reseller. Do not try to repair the product yourself since it may accidentally cause permanent damage to the product, impairing the safety of the device which in turn could lead to serious injury to personnel.

Testing of the safety functions

Make sure the safety unit is working properly by following these steps:

- Interrupt the dynamic safety circuit before this unit. The LED should flash between green and red.
- Interrupt protection (i.e. push the E-stop button). The LED should light red.
- The LED should light green when protection is OK and the safety circuit is not previously broken.

Troubleshooting

LED indicator note	Expected causes of faults	Checking and measures to take
Lights red	E-stop button is down	Reset the button by turning it clockwise and pulling it upward.
	24 VDC input to pin-2 (no dynamic signal)	Check if there is 24 VDC to input (pin-2). If Yes, check cable or unit before and fix it.
No lights	Loss of power supply	Check 24 VDC / 0 VDC power supply
Lights green (but no dynamic output detected)	Defected dynamic signal input to unit (asymmetric pulses)	Check the dynamic input or the unit before
Weak lights or red and green lights at the same time	The unit is defect	The unit needs to be replaced. Contact ABB/Jokab Safety.

5 Operation

LED indication

LED	Indication	Description	Input signal on pin-2
LED on Tina	Green	Safety circuit closed (protection OK)	Dynamic signal in
	Green-Red (flash)	Safety circuit open (protection OK)	No dynamic signal in or 0 VDC in
	Red	Safety circuit interrupted (protection open)	+24 VDC in or safety circuit interrupted

Information output signal attributes

The information output of the unit (pin-5) is set either high (+24 VDC) or low (0 VDC) depending on four different input signals (pin-2):

- **Dynamic signal** - Dynamic signal input exist, i.e. the safety circuit is OK up until this unit
- **No dynamic signal** - Dynamic signal input does not exist, i.e. the safety circuit is interrupted before this unit.
- **+24 VDC** - A constant +24 VDC signal is applied = high (H)
- **0 VDC** - The pin is connected to 0 VDC = low (L)

The information output signal depends on the input signal according to the table below. Note that if the safety is interrupted; i.e. if the emergency button is pressed, the information output signal is always low (L).

Input signal (pin-2)	Dynamic signal	No dynamic signal	+24 VDC	0 VDC
Info output signal (pin-5)	High	High	Low	High

The delay for switching the information signal output from high to low (H → L) and low to high (L → H) is given in the table below.

Info output signal switch	H → L	L → H
Delay	~ 12 ms	~ 0 ms

NB: If the unit detects an error (short circuit or interruption) lasting shorter than 13 ms the information output signal is set to low for 1.2 s (1200 ms) and then set to high again. This does not affect Vital since it needs a longer interruption to release. Pluto however does release, which means that a filter (20 ms) must be implemented if this function is needed.

⚠ **Warning!** The information output signal is not a failsafe signal and shall **never** be used for the safety purpose(s).

6 Model overview

Type	Article number	Description
Smile 11EA Tina	2TLA030050R0000	Emergency stop, red button, M12 5-pole male
Smile 11EAR Tina	2TLA030050R0100	Emergency stop, red button, M12 5-pole male, reversed
Smile 12EA Tina	2TLA030050R0200	Emergency stop, red button, M12 5-pole male, M12 5-pole female
Smile 10EA Tina	2TLA030050R0400	Emergency stop, red button, 1m integrated cable
Smile 11SA Tina	2TLA030050R0500	Safety stop, black button, M12 5-pole male
Smile 12SA Tina	2TLA030050R0600	Safety stop, black button, M12 5-pole male, M12 5-pole female
Smile 11SAR Tina	2TLA030050R0700	Safety stop, black button, M12 5-pole male, reversed

Smile 10EA Tina

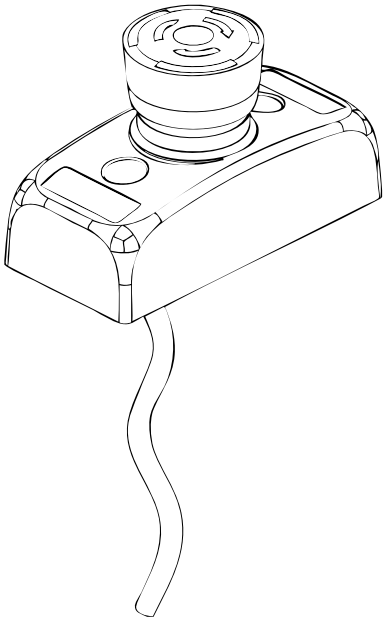

Smile 11EA Tina

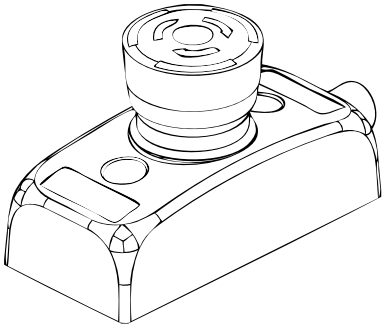

Smile 12EA Tina

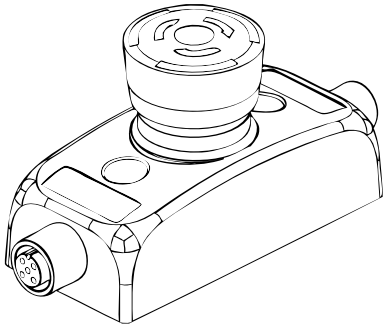

Smile 11EAR Tina

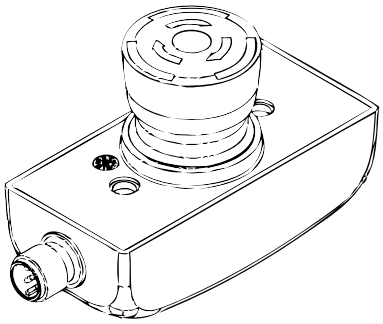

7 Technical data

Manufacturer	
Address	ABB AB / JOKAB SAFETY Varlabergsvägen 11 SE-434 39 Kungsbacka Sweden

Power supply	
Operating voltage	24 VDC +15 %, -25 %
Total current consumption	47 mA (57 mA with max information output) Information output: Max 10 mA
Time delay t (in/out)	t < 70 µs
Voltage supply at normal operation (protection OK) and 24 VDC supply voltage	Dynamic input: between 9 and 13 volt (RMS) Dynamic output: between 9 and 13 volt (RMS) Information output: ~ 23 VDC

General	
Protection class	IP65
Ambient temperature	Storage: -30…+70°C Operation: -10…+55°C
Humidity range	35 to 85 % (with no icing or condensation)
Housing material	Polyamide PA66, Macromelt, polybutylenterephthalate PBT, Polypropene PP, UL 94 V0
Contact material	Silver alloy, gold plated
Connectors	Smile 10EA Tina: 5-pole cable, 1 m (Smile 10EA Tina) Smile 11x* Tina: M12 5-pole male Smile 12x* Tina: M12 5-pole male, M12 5-pole female * - x can be all models -EA, -EAR, -SA, -SAR
Size	84 x 40 x 52 (L x W x H) – see drawing
Weight	~ 65 g
Colour	Yellow base, red or black button
Actuator force (E-stop button)	22 +/- 4N
Actuator travel	~ 4 mm to latch
Mechanical life	> 50,000 operations
Impact resistance (half sinusoidal)	Max. 150 m/s^2, pulse width 11 ms, 3-axis (as per EN IEC 60068-2-27)
Vibration resistance (half sinusoidal)	Max. 50m/s^2 at 10 Hz, 10 cycles, 3-axis (as per EN IEC 60068-2-6)

Climate resistance	
Damp heat, cyclical	96 hours, +25°C / 97%, +55°C / 93% relative humidity, as per EN IEC 60068-2-30
Damp heat, sustained	56 days, +40°C / 93% relative humidity, as per EN IEC 60068-2-78
Dry heat	96 hours, +70°C, as per EN IEC 60068-2-2
Cooling	96 hours, -40°C, as per EN IEC 60068-2-1
Salt mist	96 hours, +35°C in a chemical solution with NaCl as per EN IEC 60068-2-11

Safety / Harmonized Standards	
Conformity	European Machinery Directive 2006/42/EC CE EN ISO 12100:2010, EN 954-1:1996/EN ISO 13849-1:2008, EN 62061:2005, EN 61508:2010, EN 60204-1:2006+A1:2009, IEC 60664-1:2007, EN 61000-6-2:2005, EN 61000-6-4:2007, EN 60947-5-5:2005, EN ISO 13850:2006
IEC/EN 61508-1…7	SIL3, PFH_d: $4.66*10^{-9}$
EN 62061	SIL3
EN ISO 13849-1	Performance level: PL e, category 4
EN 954-1	Category 4
Certificates	TÜV Nord

⚠ **Warning!** The maximum number of operations (cycles) for the emergency stop Smile Tina is 6050 operations.

Dimensions

Dimensions – Smile Tina

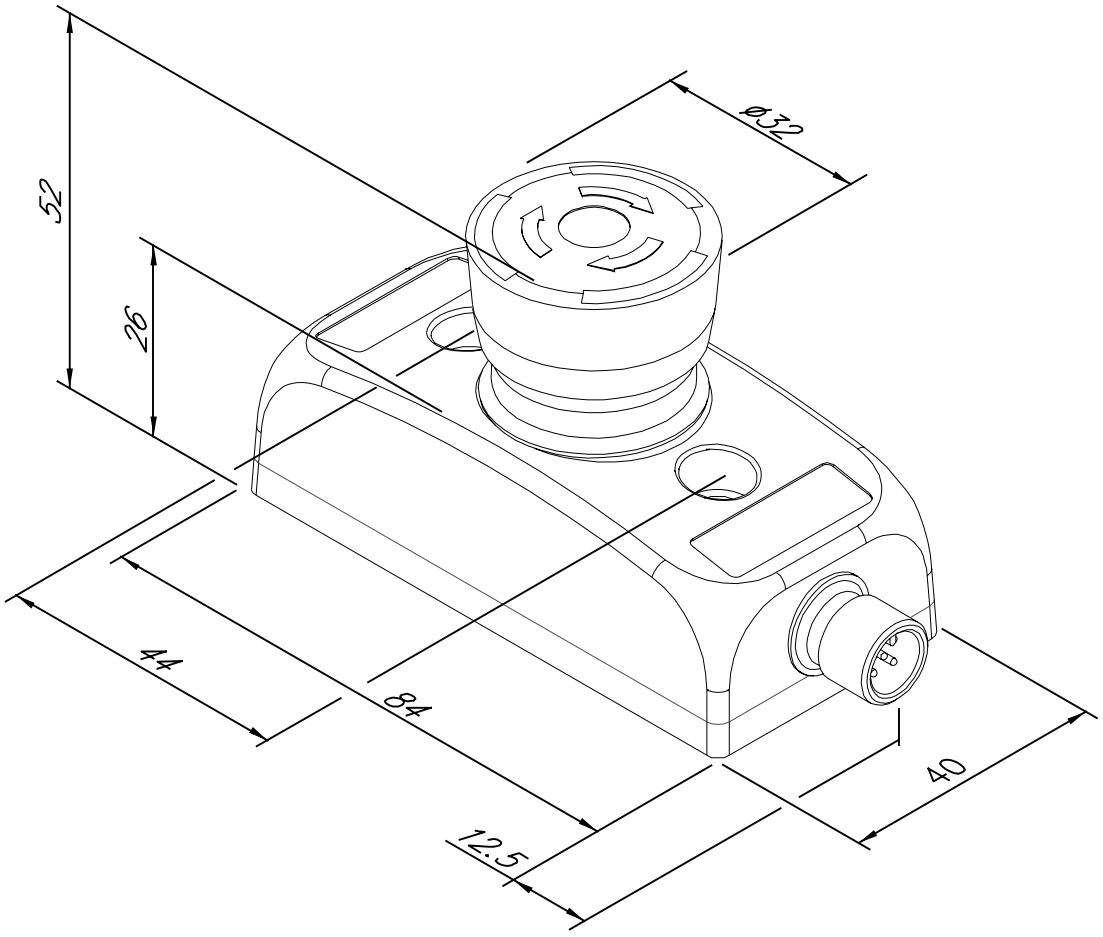

NB: All measurements in millimetres.

8 EC Declaration of conformity

EC Declaration of conformity

(according to 2006/42/EC, Annex2A)

We	ABB AB JOKAB SAFETY Varlabergsvägen 11 SE-434 39 Kungsbacka Sweden	declare that the safety components of JOKAB SAFETY make with type designations and safety functions as listed below, is in conformity with the Directives 2006/42/EC 2006/95/EC 2004/108/EC
Authorised to compile the technical file		ABB AB JOKAB SAFETY Varlabergsvägen 11 SE-434 39 Kungsbacka Sweden

Product	Certificate	Serialnumber
Emergency stop device Smile Tina	44 207 11 372092-001	[000 – 000 ... 999-999]
Emergency stop device Inca-Tina	44 207 11 372092-001	[000 – 000 ... 999-999]

Notified body	TÜV NORD CERT GmbH Langemarckstrasse 20 45141 Essen Germany Notified body No. 0044
Used harmonized standards	EN ISO 12100:2010, EN 954-1:1996/EN ISO 13849-1:2008, EN 62061:2005, EN 61508:2010, EN 60204-1:2006+A1:2009, IEC 60664-1:2007, EN 61000-6-2:2005, EN 61000-6-4:2007, EN 60947-5-5:2005, EN ISO 13850:2006

Jesper Kristensson
PRU Manager
Kungsbacka 2011-10-18

www.abb.com
www.jokabsafety.com

Original