Preparation of compressed air → Maintenance units and components

3/2-way valve, electrically operated, Series NL2-SOV

► G 1/4 ► pipe connection ► Electr. connection: Plug, ISO 6952, form B ► ATEX optional



00106022_2

Version	Poppet valve, Can be assembled into blocks short circuit protected
Pilot	internal
Sealing principle	soft sealing
Working pressure min./max.	2.5 bar / 10 bar
Ambient temperature min./max.	-10°C / +60°C
Medium temperature min./max.	-10°C / +60°C
Medium	Compressed air
Max. particle size	5 µm
Protection class according to EN 60529:, with Plug	IP 65
Duty cycle	100 %
Materials:	
Housing	Die cast zinc
Seals	Acrylonitrile butadiene styrene
Front plate	Acrylonitrile butadiene styrene

Technical Remarks

- The pressure dew point must be at least 15 °C under ambient and medium temperature and may not exceed 3 °C.
- ATEX optional: The ATEX ID depends on the selected ATEX coil.

Operating voltage			Power consumption	Switch-on power	Holding power
DC	AC 50 Hz	AC 60 Hz	DC	AC 50 Hz	AC 50 Hz
			W	VA	VA
24 V	-	-	4.8	-	-
-	230 V	230 V	-	11.8	8.5

		Port	Exhaust	Operating voltage			Qn		Weight	Note	Part No.
				DC	AC 50 Hz	AC 60 Hz	1►2	2►3			
								[l/min]	[kg]		
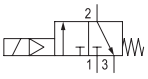	-	G 1/4	G 1/4	24 V -	- 230 V	- 230 V	1100	450	0.45	-	0821300922 0821300923
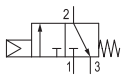	-	G 1/4	G 1/4	-	-	-	1100	450	0.49	1); 3)	0821300924
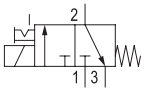		G 1/4	G 1/4	-	-	-	1100	450	0.45	1); 2); 3)	0821300929

nominal flow Qn with secondary pressure 6 bar at Δp = 1 bar
1) pilot valve without coil
2) manual override: with detent
3) ATEX optional

3/2-way valve, electrically operated, Series NL2-SOV

► G 1/4 ► pipe connection ► Electr. connection: Plug, ISO 6952, form B ► ATEX optional

Flow rate characteristic

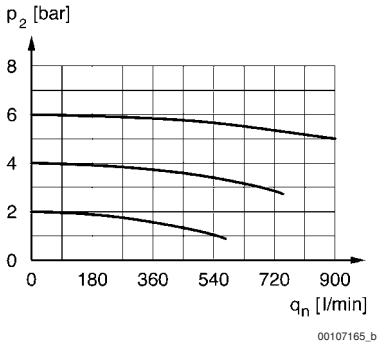

p2 = secondary pressure
qn = nominal flow

Dimensions

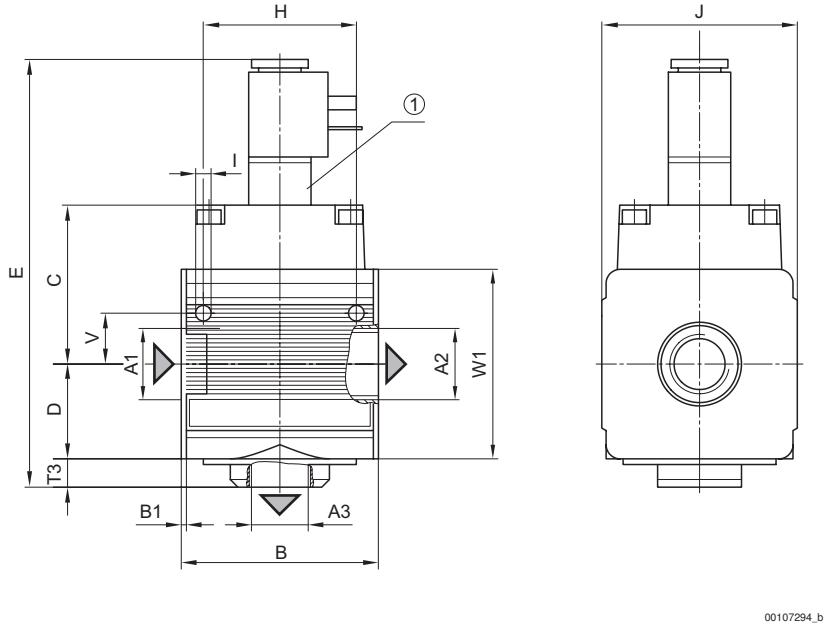

1) electrically operated

A1	A2	A3	B	B1	C	D	E	H	I	J	T3	V	W1
G 1/4	G 1/4	G 1/4	48	1.5	44	26	131	36	4.4	47	10	12.3	52