# DATASHEET - T3-3-8342/I2/SVB



**Main switch, T3, 32 A, surface mounting, 3 contact unit(s), 6 pole, Emergency switching off function, With red rotary handle and yellow locking ring, Lockable in the 0 (Off) position**

| | |
|---|---|
| **Part no.** | **T3-3-8342/I2/SVB** |
| **Catalog No.** | **207208** |
| **EL-Nummer (Norway)** | **0001457803** |

## Delivery program

| | | | |
|---|---|---|---|
| Product range | | | Main switch<br>maintenance switch<br>Repair switch |
| Part group reference | | | T3 |
| Stop Function | | | Emergency switching off function |
| | | | With red rotary handle and yellow locking ring |
| Number of poles | | | 6 pole |
| Locking facility | | | Lockable in the 0 (Off) position |
| Degree of Protection | | | IP65 |
| | | | totally insulated |
| Design | | | surface mounting |
| | | | 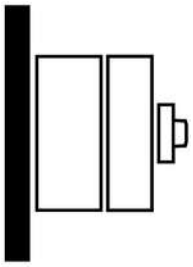 |
| Contact sequence | | | 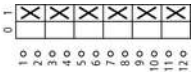 |
| Switching angle | | ° | 90 |
| Design number | | | 8342 |
| Function | | | 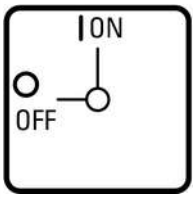 |

### Motor rating AC-23A, 50 - 60 Hz

| | | | |
|---|---|---|---|
| 400 V | P | kW | 15 |
| Rated uninterrupted current | $I_u$ | A | 32 |
| Note on rated uninterrupted current $!_u$ | | | Rated uninterrupted current $I_u$ is specified for max. cross-section. |
| Number of contact units | | contact unit(s) | 3 |

## Technical data

### General

| | | | |
|---|---|---|---|
| Standards | | | IEC/EN 60947, VDE 0660, IEC/EN 60204<br>Switch-disconnector according to IEC/EN 60947-3 |
| Climatic proofing | | | Damp heat, constant, to IEC 60068-2-78<br>Damp heat, cyclic, to IEC 60068-2-30 |
| Ambient temperature | | | |
| Enclosed | | °C | -25 - +40 |
| Overvoltage category/pollution degree | | | III/3 |
| Rated impulse withstand voltage | $U_{imp}$ | V AC | 6000 |

| | | | |
|---|---|---|---|
| Mechanical shock resistance | | g | 12 |
| Mounting position | | | As required |

## Contacts

| | | | |
|---|---|---|---|
| Mechanical variables | | | |
| Number of poles | | | 6 pole |
| Electrical characteristics | | | |
| Rated operational voltage | $U_e$ | V AC | 690 |
| Rated uninterrupted current | $I_u$ | A | 32 |
| Note on rated uninterrupted current $!_u$ | | | Rated uninterrupted current $I_u$ is specified for max. cross-section. |
| Load rating with intermittent operation, class 12 | | | |
| AB 25 % DF | | x $I_e$ | 2 |
| AB 40 % DF | | x $I_e$ | 1.6 |
| AB 60 % DF | | x $I_e$ | 1.3 |
| Short-circuit rating | | | |
| Fuse | | A gG/gL | 35 |
| Rated short-time withstand current (1 s current) | $I_{cw}$ | $A_{rms}$ | 650 |
| Note on rated short-time withstand current Icw | | | Current for a time of 1 second |
| Rated conditional short-circuit current | $I_q$ | kA | 1 |

## Switching capacity

| | | | |
|---|---|---|---|
| cos φ rated making capacity as per IEC 60947-3 | | A | 320 |
| Rated breaking capacity cos φ to IEC 60947-3 | | A | |
| 230 V | | A | 260 |
| 400/415 V | | A | 260 |
| 500 V | | A | 240 |
| 690 V | | A | 170 |
| Safe isolation to EN 61140 | | | |
| between the contacts | | V AC | 440 |
| Current heat loss per contact at $I_e$ | | W | 1.1 |
| Current heat loss per auxiliary circuit at $I_e$ (AC-15/230 V) | | CO | 1.1 |
| Lifespan, mechanical | Operations | x $10^6$ | > 0.5 |
| Maximum operating frequency | Operations/h | | 1200 |
| AC | | | |
| AC-3 | | | |
| Rating, motor load switch | P | kW | |
| 220 V 230 V | P | kW | 5.5 |
| 230 V Star-delta | P | kW | 7.5 |
| 400 V 415 V | P | kW | 11 |
| 400 V Star-delta | P | kW | 15 |
| 500 V | P | kW | 15 |
| 500 V Star-delta | P | kW | 18.5 |
| 690 V | P | kW | 11 |
| 690 V Star-delta | P | kW | 22 |
| Rated operational current motor load switch | | | |
| 230 V | $I_e$ | A | 23.7 |
| 230 V star-delta | $I_e$ | A | 32 |
| 400V 415 V | $I_e$ | A | 23.7 |
| 400 V star-delta | $I_e$ | A | 32 |
| 500 V | $I_e$ | A | 23.7 |
| 500 V star-delta | $I_e$ | A | 32 |
| 690 V | $I_e$ | A | 14.7 |
| 690 V star-delta | $I_e$ | A | 25.5 |
| AC-21A | | | |
| Rated operational current switch | | | |
| 440 V | $I_e$ | A | 32 |

| | | | |
|---|---|---|---|
| AC-23A | | | |
| Motor rating AC-23A, 50 - 60 Hz | P | kW | |
| 230 V | P | kW | 7.5 |
| 400 V 415 V | P | kW | 15 |
| 500 V | P | kW | 15 |
| 690 V | P | kW | 15 |
| Rated operational current motor load switch | | | |
| 230 V | $I_e$ | A | 32 |
| 400 V 415 V | $I_e$ | A | 32 |
| 500 V | $I_e$ | A | 26.4 |
| 690 V | $I_e$ | A | 17 |
| DC | | | |
| DC-1, Load-break switches L/R = 1 ms | | | |
| Rated operational current | $I_e$ | A | 25 |
| Voltage per contact pair in series | | V | 60 |
| DC-21A | $I_e$ | A | |
| Rated operational current | $I_e$ | A | 1 |
| Contacts | | Quantity | 1 |
| DC-23A, motor load switch L/R = 15 ms | | | |
| 24 V | | | |
| Rated operational current | $I_e$ | A | 25 |
| Contacts | | Quantity | 1 |
| 48 V | | | |
| Rated operational current | $I_e$ | A | 25 |
| Contacts | | Quantity | 2 |
| 60 V | | | |
| Rated operational current | $I_e$ | A | 25 |
| Contacts | | Quantity | 3 |
| 120 V | | | |
| Rated operational current | $I_e$ | A | 12 |
| Contacts | | Quantity | 3 |
| 240 V | | | |
| Rated operational current | $I_e$ | A | 5 |
| Contacts | | Quantity | 5 |
| DC-13, Control switches L/R = 50 ms | | | |
| Rated operational current | $I_e$ | A | 20 |
| Voltage per contact pair in series | | V | 24 |
| Control circuit reliability at 24 V DC, 10 mA | Fault probability | $H_F$ | $< 10^{-5}$,< 1 failure in 100,000 switching operations |

## Terminal capacities

| | | | |
|---|---|---|---|
| Solid or stranded | | $mm^2$ | 1 x (1 - 6)<br>2 x (1 - 6) |
| Flexible with ferrules to DIN 46228 | | $mm^2$ | 1 x (0.75 - 4)<br>2 x (0.75 - 4) |
| Terminal screw | | | M4 |
| Tightening torque for terminal screw | | Nm | 1.6 |

## Technical safety parameters:

| | | | |
|---|---|---|---|
| **Notes** | | | $B10_d$ values as per EN ISO 13849-1, table C1 |

## Rating data for approved types

| | | | |
|---|---|---|---|
| Terminal capacity | | | |
| Terminal screw | | | M4 |
| Tightening torque | | lb-in | 17.7 |

# Design verification as per IEC/EN 61439

| | | | |
|---|---|---|---|
| Technical data for design verification | | | |
| Rated operational current for specified heat dissipation | $I_n$ | A | 32 |

| | | | |
|---|---|---|---|
| Heat dissipation per pole, current-dependent | $P_{vid}$ | W | 1.1 |
| Equipment heat dissipation, current-dependent | $P_{vid}$ | W | 0 |
| Static heat dissipation, non-current-dependent | $P_{vs}$ | W | 0 |
| Heat dissipation capacity | $P_{diss}$ | W | 0 |
| Operating ambient temperature min. | | °C | -25 |
| Operating ambient temperature max. | | °C | 40 |
| IEC/EN 61439 design verification | | | |
| 10.2 Strength of materials and parts | | | |
| 10.2.2 Corrosion resistance | | | Meets the product standard's requirements. |
| 10.2.3.1 Verification of thermal stability of enclosures | | | Meets the product standard's requirements. |
| 10.2.3.2 Verification of resistance of insulating materials to normal heat | | | Meets the product standard's requirements. |
| 10.2.3.3 Verification of resistance of insulating materials to abnormal heat and fire due to internal electric effects | | | Meets the product standard's requirements. |
| 10.2.4 Resistance to ultra-violet (UV) radiation | | | UV resistance only in connection with protective shield. |
| 10.2.5 Lifting | | | Does not apply, since the entire switchgear needs to be evaluated. |
| 10.2.6 Mechanical impact | | | Does not apply, since the entire switchgear needs to be evaluated. |
| 10.2.7 Inscriptions | | | Meets the product standard's requirements. |
| 10.3 Degree of protection of ASSEMBLIES | | | Does not apply, since the entire switchgear needs to be evaluated. |
| 10.4 Clearances and creepage distances | | | Meets the product standard's requirements. |
| 10.5 Protection against electric shock | | | Does not apply, since the entire switchgear needs to be evaluated. |
| 10.6 Incorporation of switching devices and components | | | Does not apply, since the entire switchgear needs to be evaluated. |
| 10.7 Internal electrical circuits and connections | | | Is the panel builder's responsibility. |
| 10.8 Connections for external conductors | | | Is the panel builder's responsibility. |
| 10.9 Insulation properties | | | |
| 10.9.2 Power-frequency electric strength | | | Is the panel builder's responsibility. |
| 10.9.3 Impulse withstand voltage | | | Is the panel builder's responsibility. |
| 10.9.4 Testing of enclosures made of insulating material | | | Is the panel builder's responsibility. |
| 10.10 Temperature rise | | | The panel builder is responsible for the temperature rise calculation. Eaton will provide heat dissipation data for the devices. |
| 10.11 Short-circuit rating | | | Is the panel builder's responsibility. The specifications for the switchgear must be observed. |
| 10.12 Electromagnetic compatibility | | | Is the panel builder's responsibility. The specifications for the switchgear must be observed. |
| 10.13 Mechanical function | | | The device meets the requirements, provided the information in the instruction leaflet (IL) is observed. |

## Technical data ETIM 7.0

Low-voltage industrial components (EG000017) / Switch disconnector (EC000216)

Electric engineering, automation, process control engineering / Low-voltage switch technology / Off-load switch, circuit breaker, control switch / Switch disconnector (ecl@ss10.0.1-27-37-14-03 [AKF060013])

| | | |
|---|---|---|
| Version as main switch | | Yes |
| Version as maintenance-/service switch | | Yes |
| Version as safety switch | | Yes |
| Version as emergency stop installation | | Yes |
| Version as reversing switch | | No |
| Number of switches | | 1 |
| Max. rated operation voltage Ue AC | V | 690 |
| Rated operating voltage | V | 690 - 690 |
| Rated permanent current Iu | A | 32 |
| Rated permanent current at AC-23, 400 V | A | 32 |
| Rated permanent current at AC-21, 400 V | A | 32 |
| Rated operation power at AC-3, 400 V | kW | 11 |
| Rated short-time withstand current Icw | kA | 0.65 |
| Rated operation power at AC-23, 400 V | kW | 15 |
| Switching power at 400 V | kW | 15 |
| Conditioned rated short-circuit current Iq | kA | 1 |
| Number of poles | | 6 |

| | |
|---|---|
| Number of auxiliary contacts as normally closed contact | 0 |
| Number of auxiliary contacts as normally open contact | 0 |
| Number of auxiliary contacts as change-over contact | 0 |
| Motor drive optional | No |
| Motor drive integrated | No |
| Voltage release optional | No |
| Device construction | Complete device in housing |
| Suitable for ground mounting | Yes |
| Suitable for front mounting 4-hole | No |
| Suitable for front mounting centre | No |
| Suitable for distribution board installation | No |
| Suitable for intermediate mounting | No |
| Colour control element | Red |
| Type of control element | Door coupling rotary drive |
| Interlockable | Yes |
| Type of electrical connection of main circuit | Screw connection |
| Degree of protection (IP), front side | IP65 |
| Degree of protection (NEMA) | 12 |

## Approvals

| | |
|---|---|
| Product Standards | UL 60947-4-1;CSA - C22.2 No. 60947-4-1-14; CSA-C22.2 No. 94; IEC/EN 60947-3; CE marking |
| UL File No. | E36332 |
| UL Category Control No. | NLRV |
| CSA File No. | 12528 |
| CSA Class No. | 3211-05 |
| North America Certification | UL listed, CSA certified |
| Specially designed for North America | Yes, additional labeling according to UL on the enclosure in combination with "+NA-I2" (105866) |
| Suitable for | Branch circuits, suitable as motor disconnect |
| Degree of Protection | IEC: IP65; UL/CSA Type 1, 12 |

## Dimensions

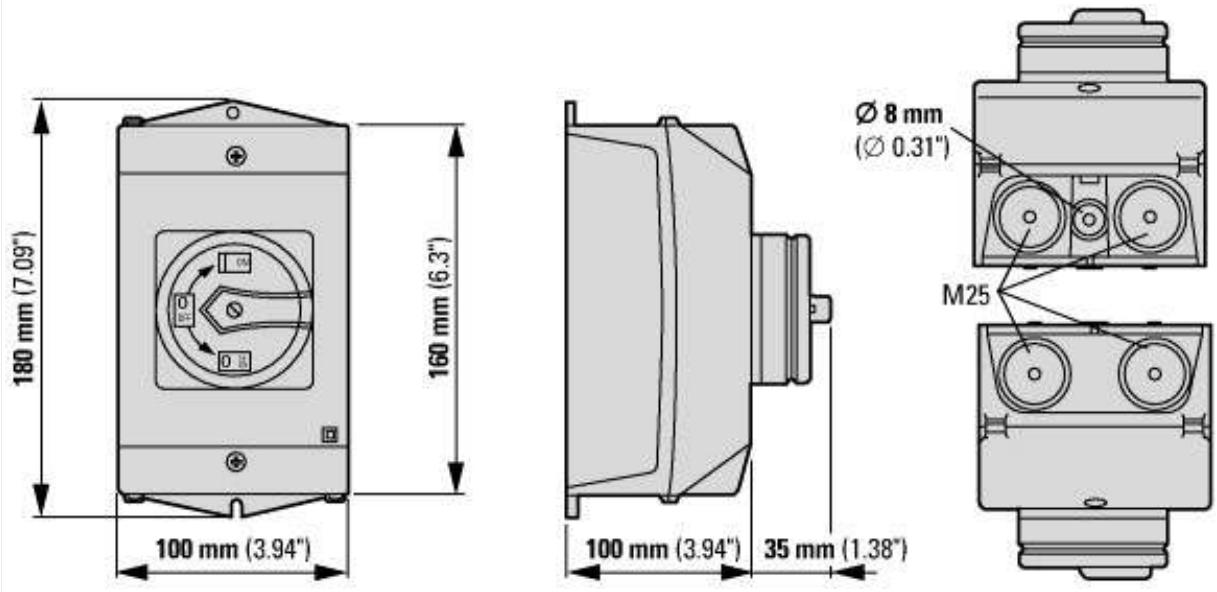

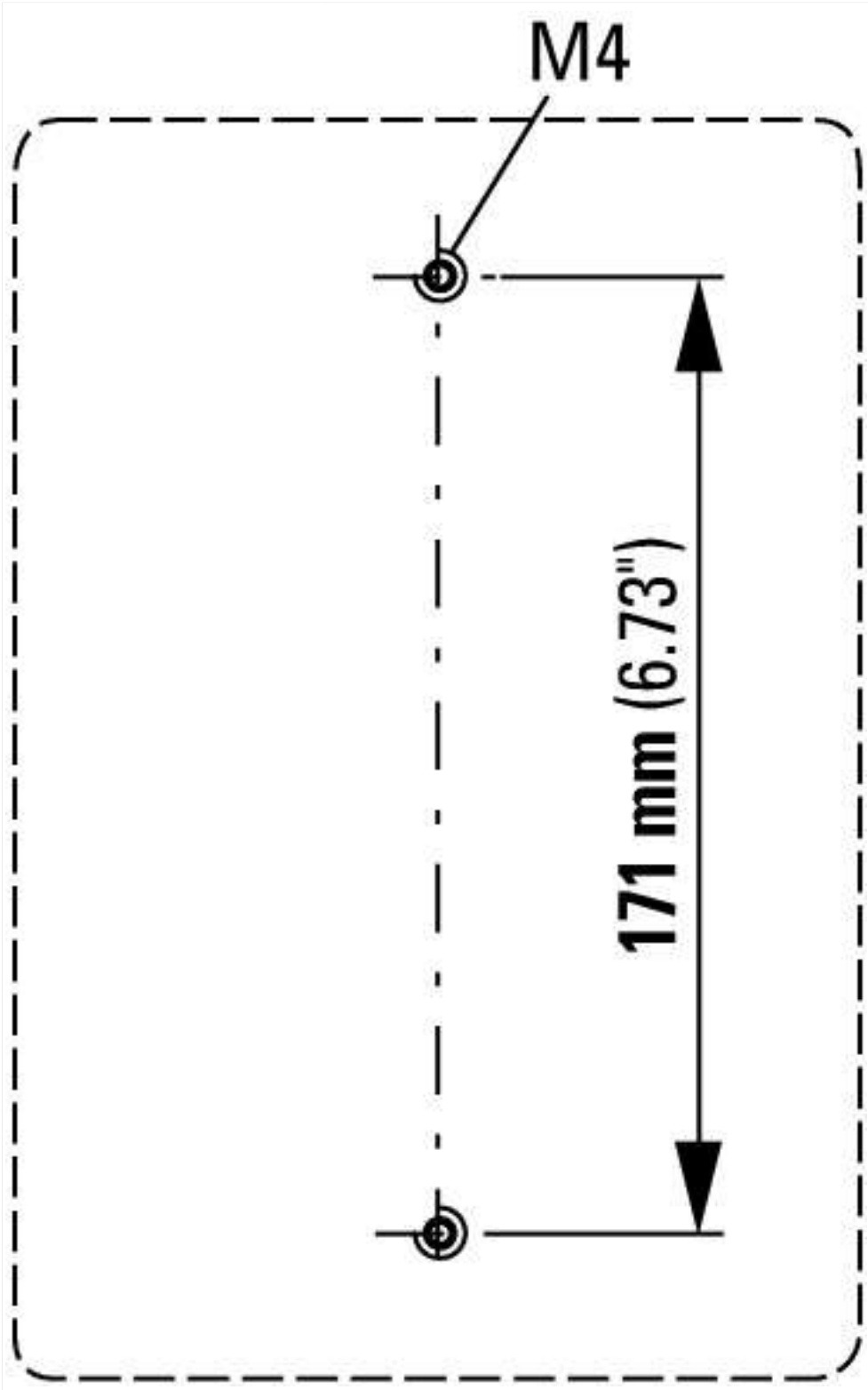


Drilling dimensions base

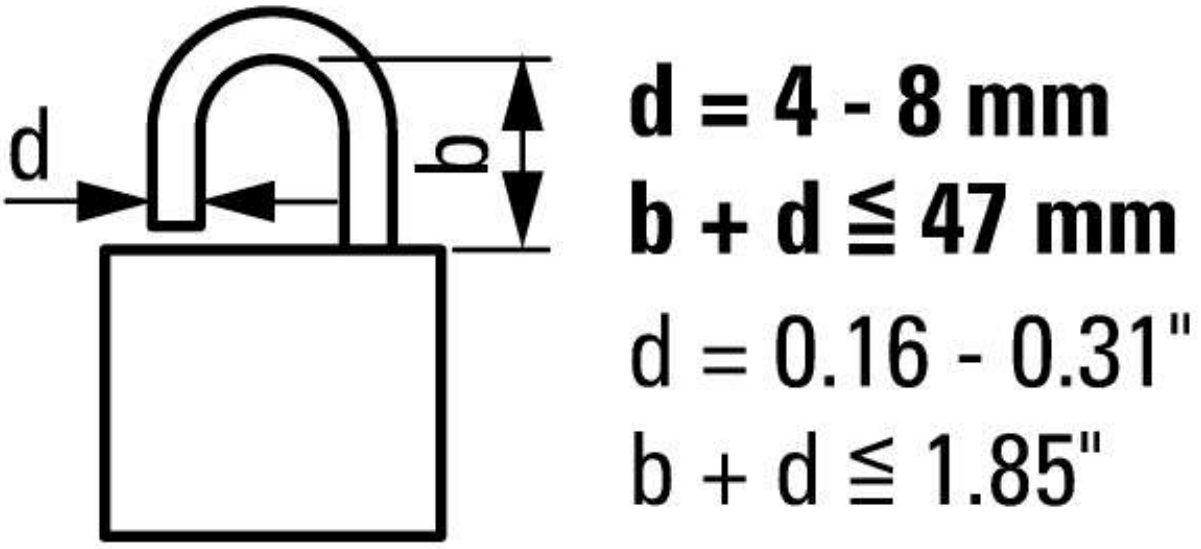


≦ 3 padlocks


© 02/2021 by Eaton Industries GmbH