3/2-Way Miniature Solenoid Valve, Sub-base connection

Type 301



Advantages/Benefits

- **When de-energized, outlet port exhausted or pressurized**
- **Body materials: brass, polyamide**
- **Fast response times**
- **Compact design**

Design/Function

Type 301 is available in a variety of different circuit functions for different applications.

When energized, the solenoid armature is drawn against a spring.

The flow path through the valve is dependent on the chosen circuit function. The solenoid epoxy encapsulation efficiently dissipates the heat generated by the coil.

Applications

- Neutral gases and liquids
- Pneumatic control
- Vacuum
- Shut-off, dosing, filling and ventilating
- Small scale instruments, laboratory and measuring equipment
- Gas control, welding equipment

bürkert
Easy Fluid Control Systems

DTS 1000010923 EN Version: A Status: RL (released I freigegeben I validé) printed: 08.08.2008

3/2-Way Miniature Solenoid Valve, Sub-base connection

Type 301

Technical Data

Circuit Function

C 3/2-way valve, when de-energized outlet port A exhausted

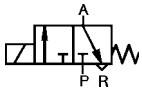

D 3/2-way valve, when de-energized outlet port B pressurized

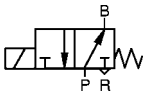

Body Material

Body and seat of brass
Body and seat of polyamide

Specifications

Orifice DN [mm]	Kv-Value Water [m³/h]	QNn-Value Air [1] [l/min]	Pressure Range [2] [bar]	Weight threaded port [kg]	Weight sub-base [kg]
1,2	0,045	48	0-10	-	0,09
1,6	0,060	65	0- 6	0,12	0,09

[1] Measured with 6 bar upstream pressure and 1 bar pressure drop across the valve at +20 °C.
[2] Also suitable for technical vacuum.

All pressures quoted are gauge pressures with respect to the prevailing atmospheric pressure.

Operating Data (Valve)

Seal Materials/Fluids Handled/Temp.- Range

NBR Neutral fluids, e.g. compressed air, water, hydraulic oil, oils and fat without additives, town gas, -10 to +90 °C

For more detailed information please refer to resistance chart (Leaflet-No. 1896009).

Max. ambient temperature + 55 °C

Max. viscosity 21 mm²/s

Response times opening 12 ms
closing 8 ms

Times measured at outlet A from switching on until pressure rise to 90 % / pressure drops to 10 % at a max. working pressure of 6 bar.

Port connection sub-base or manifold and G 1/8 banjo coupler for direct installation to remotely piloted valves

Operating Data (Actuator)

Operating voltages 24, 230, 240 V/50 Hz
12, 24 V/=

Voltage tolerance ±10 %

Power consumption AC 9 VA (inrush)
6 VA/ 4 W (hold)
DC 4 W or 2 W depending on version

Duty cycle 100% continuously rated for manifold assembly use reduced switch-on time or 2-W- version

Cycling rate up to 1000 c.p.m

Rating with cable plug, cable or lead IP 65

Installation / Accessories

Installation as required, but preferably with solenoid system upright

Electrical connection
- plug connection without cable plug (supplied as standard)
- moulded-in cable on request
- moulded-in flying leads 3 x 0,75 mm², on request
- moulded-in flying leads 2 x 0,75 mm², on request

DTS 1000010923 EN Version: A Status: RL (released I freigegeben I validé) printed: 08.08.2008

Dimensions in mm

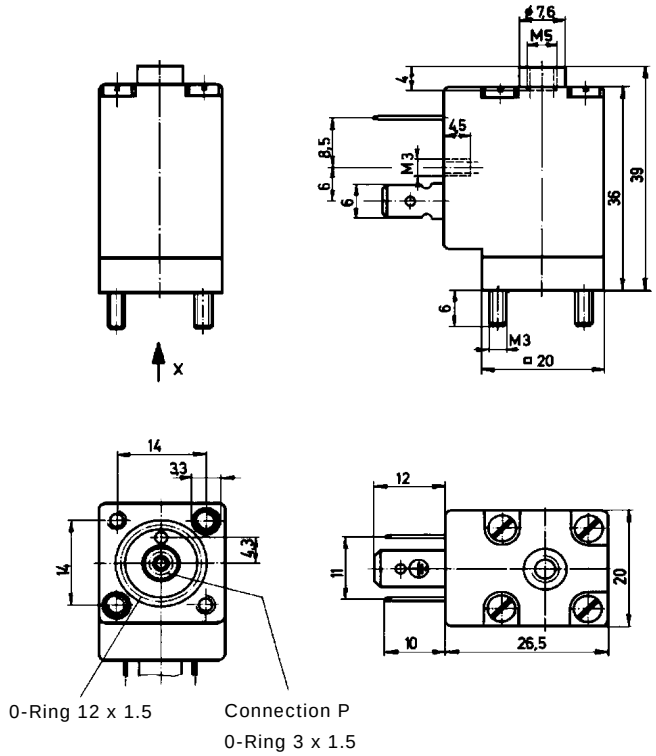

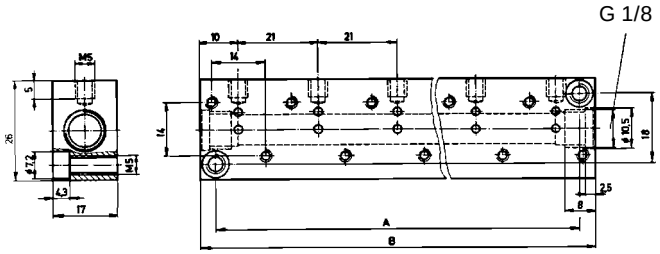

Connections

All illustrations in this data sheet show valves of circuit function C, using the connections P, R and A. These connections may vary with the circuit function D as indicated in the following overview.

Circuit Function	Connections		
C	P	R	A
D	R	P	B

i.e. the pressure port for circuit function D is located on the top of the valve.

Multiple Manifold Assembly

The manifolds have a common pressure inlet P (R) for the pressure connection of Type 301-C or the exhaust connection of Type 301-D and an individual lateral outlet A (B) for each valve. Type 301-C may also be mounted together with Type 201 valves. They can however not be mounted with Type 301-D valves. The electrical connection can be either on the right or left of the manifold.

Manifolds may be coupled together using special push-fit O-ring connecting nipples for linking the pressure inlets P (R). Manifolds joined together in this way should be securely mounted.

Order-Code for Manifold

Manifold	Hole Spacing A	Overall Length B	Order-No.
1 valve	12	20	005 312 T
2 valves	33	41	005 355 E
3 valves	54	62	005 313 U
4 valves	75	83	005 314 V
5 valves	96	104	005 315 W
6 valves	117	125	005 316 X
7 valves	138	146	005 893 K
8 valves	159	167	005 166 Z
9 valves	180	188	005 241 C
10 valves	201	209	005 819 Y
11 valves	222	230	005 242 D
12 valves	243	251	005 222 Z

Order-Code for Accessories

Specification	Order-No.
Connector nipples with NBR-O-rings (8 x 1,25)	005 040 A
3-pin cable plug, IP 65 rating	005 377 C

DTS 1000010923 EN Version: A Status: RL (released I freigegeben I validé) printed: 08.08.2008

3/2-Way Miniature Solenoid Valve, Sub-base connection

Type 301

Ordering Chart (Other Versions on Request)

Circuit Function	Orifice DN [mm]	Flow Rate Water Kv-Value [m³/h]	Flow Rate Air [1] QNn [l/min]	Port Connection [ISO 228]	Pressure Range [2] [bar]	Body Material	Seal Material	Weight [kg]	Voltage/ Frequency [V/Hz]	Order-No.
C	1,0	0,030	33	Sub-base	0-7	Brass	NBR	0,09	024/=	086 514 F [3]
	1,2	0,045	48	Sub-base	0-10	PA	NBR	0,09	024/=	054 627 X
									024/50	054 348 P
									110/50	054 345 C
									230/50	054 346 D
									240/50	054 917 J
						Brass	NBR	0,09	024/=	052 327 Y [4]
									024/=	042 974 X
									024/=	045 239 H [4][5]
									024/50	044 450 G [4]
									024/50	045 137 K
									110/50	052 326 X [4]
									110/50	042 999 Z
									230/50	052 325 W [4]
									230/50	057 082 L
									240/50	079 866 G [4]
									240/50	054 915 Q
	1,6	0,060	65	Sub-base	0- 6	Brass	NBR	0,09	012/=	067 386 T
									024/=	042 870 B
									024/50	042 872 Z
									110/50	054 032 N
									230/50	057 597 M
									240/50	061 554 V
						PA	NBR	0,09	024/50	049 755 J
									024/=	055 941 T
									110/50	066 853 W
									230/50	056 437 K
									240/50	086 486 C
				G 1/8	0- 6	Brass	NBR	0,175	024/=	062 240 P [6]
									230/50	044 141 W [6]
D	1,6	0,060	65	Sub-base	0- 4	Brass	NBR	0,06	024/=	062 407 U

[1] Measured with 6 bar upstream pressure and 1 bar pressure drop across the valve at +20 °C,
[2] also suitable for vacuum, [3] 2-W power consumption, [4] available with manual override,
[5] 3 moulded-in PVC-single strands 0.75 mm², length 300 mm, [6] Pilot valve mounted to banjo-coupler.

DTS 1000010923 EN Version: A Status: RL (released l freigegeben l validé) printed: 08.08.2008