E12640

Y connection cable

Y SPLITTER CABLE

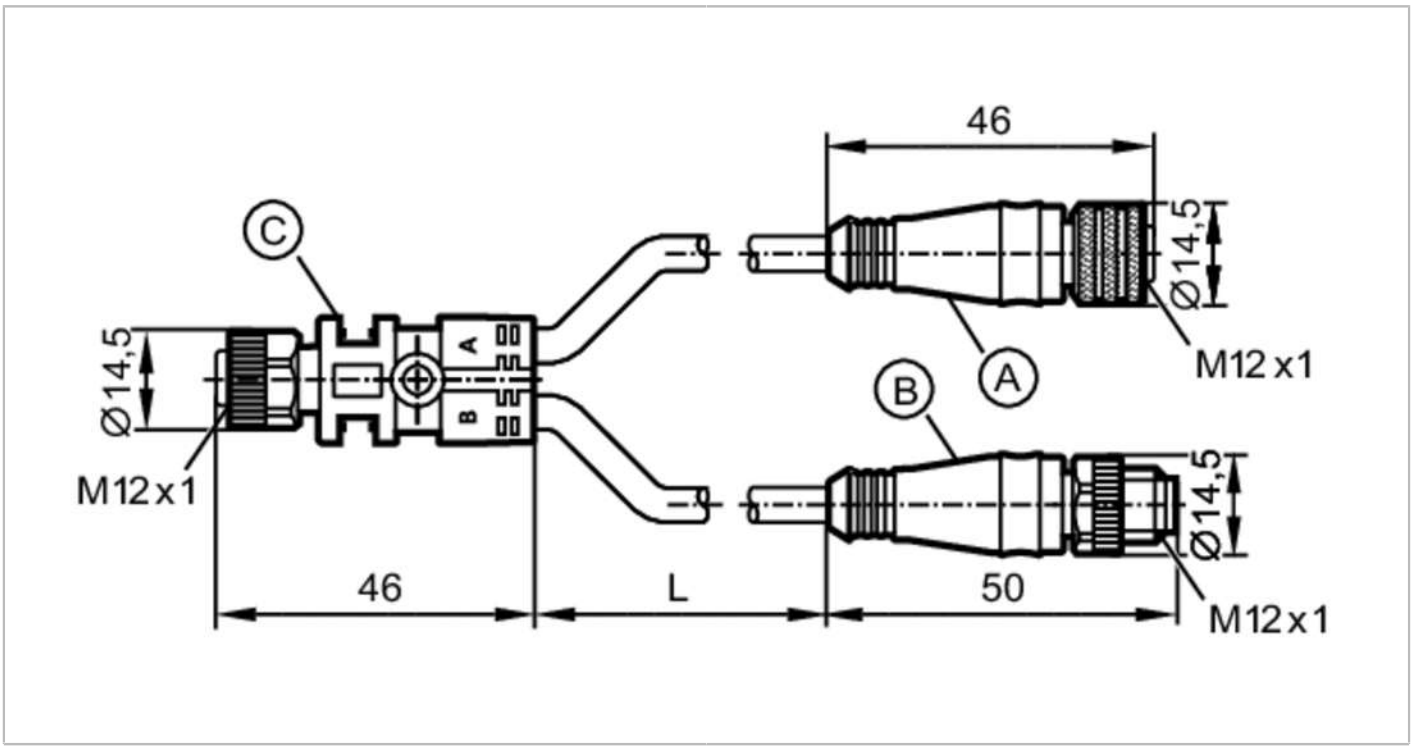

Application		
Special feature		Free from silicone
Free from silicone		yes
Electrical data		
Operating voltage	[V]	< 30 AC / < 36 DC
Protection class		III
Max. current load total	[A]	2
Operating conditions		
Ambient temperature	[°C]	-25...80
Protection		IP 67
Mechanical data		
Weight	[g]	51.88
Moulded-body material		TPU
Material nut		brass, nickel-plated
Sealing material		FPM
Number of ports splitter box		2
Accessories		
Accessory required		E12639
Remarks		
Pack quantity		1 pcs.

E12640

Y connection cable

Y SPLITTER CABLE

Electrical connection - socket C

Connection

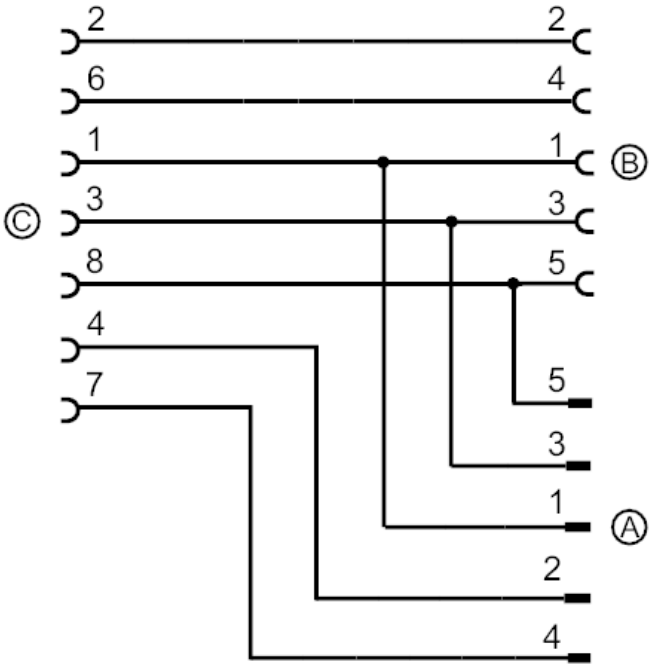

Connector: 1 x M12; coding: A; Moulded body: TPU; Locking: brass, nickel-plated; Sealing: FPM; Tightening torque: 1 Nm



Electrical connection - socket B

Cable: 0.15 m, PVC, black, Ø 5 mm; 5 x 0.25 mm² (32 x Ø 0.1 mm)

Connector: 1 x M12; coding: A; Moulded body: TPU; Locking: brass, nickel-plated; Sealing: FPM; Tightening torque: 1 Nm



E12640

Y connection cable

Y SPLITTER CABLE

Electrical connection - plug A

Cable: 0.15 m, PVC, black, Ø 5 mm; 5 x 0.25 mm² (32 x Ø 0.1 mm)

Connector: 1 x M12; coding: A; Moulded body: TPU; Locking: brass, nickel-plated; Sealing: FPM; Tightening torque: 1 Nm

