Fastening Technology

BMS CS-M-D12-IZ-01
Order Code: BAM003Y

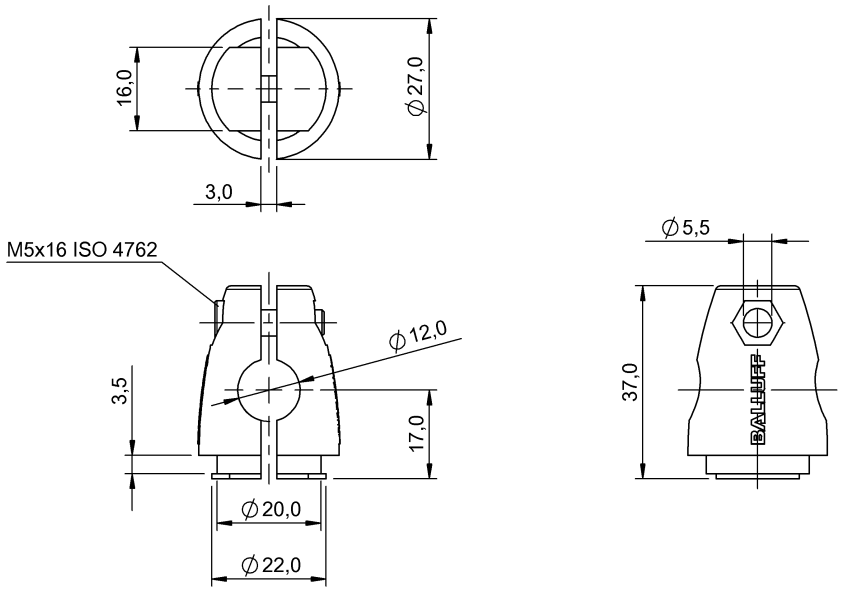

Basic features

Approval/Conformity	Ecolab
Principle of operation	Mounting system
Scope of delivery	Clamp holder (1x) Nut ISO 4032-M5 Screw ISO 4762-M5x16
Style	Cylinder clamp
Use	for mounting system BMS for holding rods with Ø12 mm

Material

Material	Stainless steel (1.4301)

Mechanical data

Dimension	Ø 27 x 37 mm
Mounting part	Screws, clamps