PRODUCT FAMILY DATASHEET
DOWNLIGHT SLIM ROUND

Flat downlights with integrated driver, round shape



AREAS OF APPLICATION

- Direct replacement for luminaires with compact fluorescent lamps
- General illumination
- Public areas
- Stairways
- Corridors
- Foyers
- Shops

PRODUCT BENEFITS

- Very slim housing
- Low installation depth
- High luminous efficacy
- Energy savings up to 60 % (compared to luminaires that use CFL lamps)
- Very homogenous light
- Functional design
- Easy installation with fast connection
- Simple installation thanks to integrated driver

PRODUCT FEATURES

- Small visible bezel
- Connector box with push wire terminal for tool-free connection
- Light guide made of non-yellowing PMMA for long lifetime



© 2018, LEDVANCE GmbH. All rights reserved.

TECHNICAL DATA

	Electrical data			Luminaire control gear data		Photometrical data			Light technical data	Dimensions & weight
Product description	**Nominal wattage**	**Nominal voltage**	**Mains frequency**	**Ouput current**	**ECG - Output ripple current**	**Luminous flux**	**Light color (designation)**	**Color rendering index Ra**	**Beam angle**	**Diameter**
DL SLIM DN 105 6 W 3000 K WT	6.00 W	220...240 V	50/60 Hz	180 mA	<6.5 %	420 lm	Warm White	>80	120 °	118.0 mm
DL SLIM DN 105 6 W 4000 K WT	6.00 W	220...240 V	50/60 Hz	180 mA	<6.5 %	430 lm	Cool White	>80	120 °	118.0 mm
DL SLIM DN 105 6 W 6500 K WT	6.00 W	220...240 V	50/60 Hz	180 mA	<6.5 %	430 lm	Cool Daylight	>80	120 °	118.0 mm
DL SLIM DN 155 12 W 3000 K WT	12.00 W	220...240 V	50/60 Hz	180 mA	<6.5 %	1020 lm	Warm White	>80	120 °	169.0 mm
DL SLIM DN 155 12 W 4000 K WT	12.00 W	220...240 V	50/60 Hz	180 mA	<6.5 %	1020 lm	Cool White	>80	120 °	169.0 mm
DL SLIM DN 155 12 W 6500 K WT	12.00 W	220...240 V	50/60 Hz	180 mA	<6.5 %	1020 lm	Cool Daylight	>80	120 °	169.0 mm
DL SLIM DN 210 18 W 3000 K WT	18.00 W	220...240 V	50/60 Hz	295 mA	<6.5 %	1530 lm	Warm White	>80	120 °	225.0 mm
DL SLIM DN 210 18 W 4000 K WT	18.00 W	220...240 V	50/60 Hz	295 mA	<6.5 %	1530 lm	Cool White	>80	120 °	225.0 mm
DL SLIM DN 210 18 W 6500 K WT	18.00 W	220...240 V	50/60 Hz	295 mA	<6.5 %	1530 lm	Cool Daylight	>80	120 °	225.0 mm

				Colors & materials		Temperatures & operating conditions	Lifespan	Capabilities	
Product description	**Height**	**Product weight**	**Mounting diameter**	**Body material**	**Product color**	**Ambient temperature range**	**Lifespan L70 at 25 °C**	**Dimmable**	**Type of connection**
DL SLIM DN 105 6 W 3000 K WT	30.0 mm	158.00 g	105.0 mm	Polycarbonate (PC)	White	-20...50 °C	30000 h	No	Push button terminal, 2-pole
DL SLIM DN 105 6 W 4000 K WT	30.0 mm	158.00 g	105.0 mm	Polycarbonate (PC)	White	-20...50 °C	30000 h	No	Push button terminal, 2-pole
DL SLIM DN 105 6 W 6500 K WT	30.0 mm	158.00 g	105.0 mm	Polycarbonate (PC)	White	-20...50 °C	30000 h	No	Push button terminal, 2-pole

© 2018, LEDVANCE GmbH. All rights reserved.

				Colors & materials		Temperatures & operating conditions	Lifespan	Capabilities	
Product description	**Height**	**Product weight**	**Mounting diameter**	**Body material**	**Product color**	**Ambient temperature range**	**Lifespan L70 at 25 °C**	**Dimmable**	**Type of connection**
DL SLIM DN 155 12 W 3000 K WT	30.0 mm	272.00 g	155.0 mm	Polycarbonate (PC)	White	-20…50 °C	30000 h	No	Push button terminal, 2-pole
DL SLIM DN 155 12 W 4000 K WT	30.0 mm	272.00 g	155.0 mm	Polycarbonate (PC)	White	-20…50 °C	30000 h	No	Push button terminal, 2-pole
DL SLIM DN 155 12 W 6500 K WT	30.0 mm	272.00 g	155.0 mm	Polycarbonate (PC)	White	-20…50 °C	30000 h	No	Push button terminal, 2-pole
DL SLIM DN 210 18 W 3000 K WT	30.0 mm	435.00 g	210.0 mm	Polycarbonate (PC)	White	-20…50 °C	30000 h	No	Push button terminal, 2-pole
DL SLIM DN 210 18 W 4000 K WT	30.0 mm	435.00 g	210.0 mm	Polycarbonate (PC)	White	-20…50 °C	30000 h	No	Push button terminal, 2-pole
DL SLIM DN 210 18 W 6500 K WT	30.0 mm	435.00 g	210.0 mm	Polycarbonate (PC)	White	-20…50 °C	30000 h	No	Push button terminal, 2-pole

	Certificates & standards	
Product description	**Protection class**	**Type of protection**
DL SLIM DN 105 6 W 3000 K WT	II	IP20
DL SLIM DN 105 6 W 4000 K WT	II	IP20
DL SLIM DN 105 6 W 6500 K WT	II	IP20
DL SLIM DN 155 12 W 3000 K WT	II	IP20
DL SLIM DN 155 12 W 4000 K WT	II	IP20

© 2018, LEDVANCE GmbH. All rights reserved.

	Certificates & standards	
Product description	**Protection class**	**Type of protection**
DL SLIM DN 155 12 W 6500 K WT	II	IP20
DL SLIM DN 210 18 W 3000 K WT	II	IP20
DL SLIM DN 210 18 W 4000 K WT	II	IP20
DL SLIM DN 210 18 W 6500 K WT	II	IP20

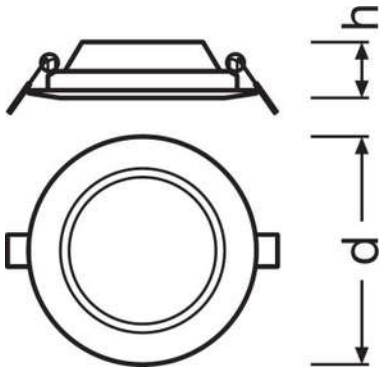

DL SLIM DN 105 6 W 3000 K WT, DL SLIM DN 105 6 W 4000 K WT, DL SLIM DN 105 6 W 6500 K WT

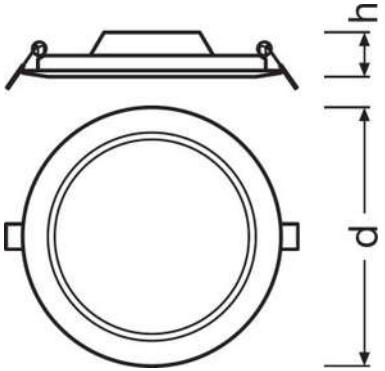

DL SLIM DN 155 12 W 3000 K WT, DL SLIM DN 155 12 W 4000 K WT, DL SLIM DN 155 12 W 6500 K WT

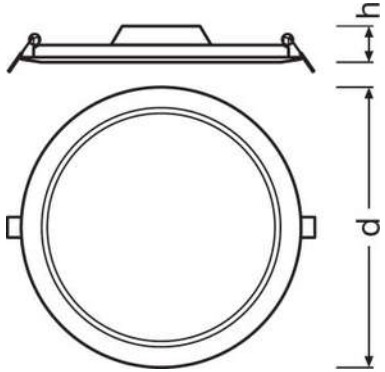

DL SLIM DN 210 18 W 3000 K WT, DL SLIM DN 210 18 W 4000 K WT, DL SLIM DN 210 18 W 6500 K WT

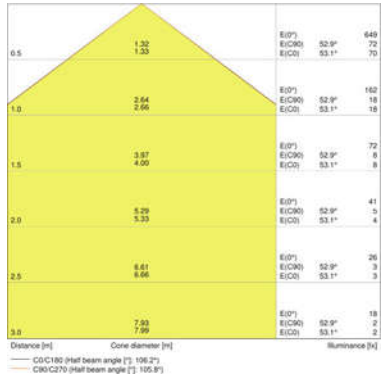

DL SLIM DN 105 6 W 3000 K WT

© 2018, LEDVANCE GmbH. All rights reserved.

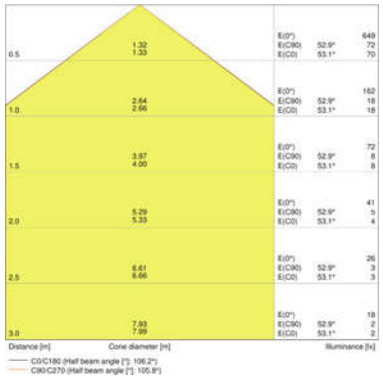

DL SLIM DN 105 6 W 4000 K WT

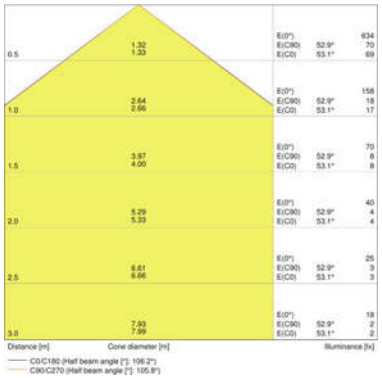

DL SLIM DN 105 6 W 6500 K WT

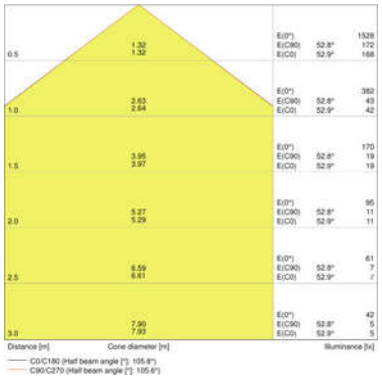

DL SLIM DN 155 12 W 3000 K WT

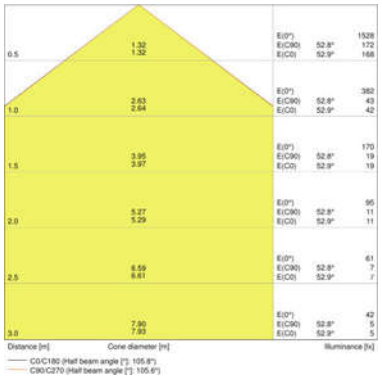

DL SLIM DN 155 12 W 4000 K WT

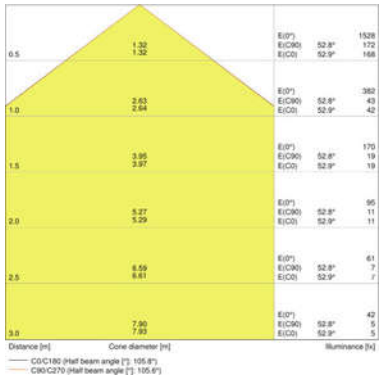

DL SLIM DN 155 12 W 6500 K WT

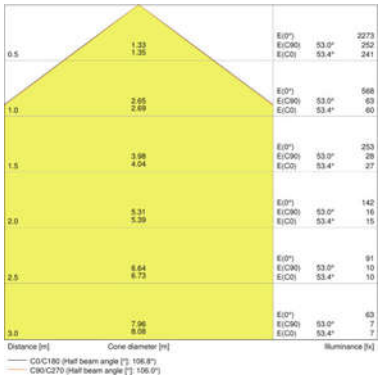

DL SLIM DN 210 18 W 3000 K WT

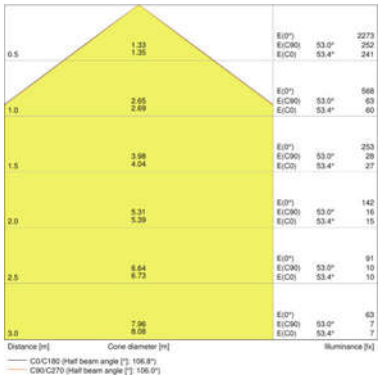

DL SLIM DN 210 18 W 4000 K WT

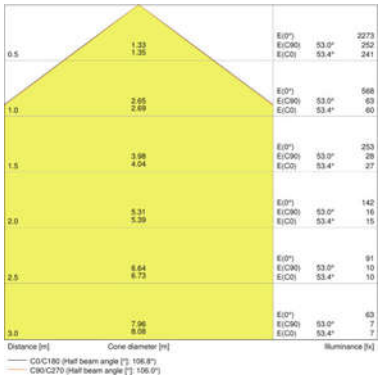

DL SLIM DN 210 18 W 6500 K WT

EQUIPMENT / ACCESSORIES

© 2018, LEDVANCE GmbH. All rights reserved.

– Surface mounting frames available as accessories

APPLICATION ADVICE

For more detailed application information and graphics please see product datasheet.

LOGISTICAL DATA

Product code	Product description	Packaging unit (Pieces/Unit)	Dimensions (length x width x height)	Volume	Gross weight
4058075078970	DL SLIM DN 105 6 W 3000 K WT	Shipping carton box 6	290 mm x 165 mm x 165 mm	7.90 dm³	1317.00 g
4058075078994	DL SLIM DN 105 6 W 4000 K WT	Shipping carton box 6	290 mm x 165 mm x 165 mm	7.90 dm³	1317.00 g
4058075079014	DL SLIM DN 105 6 W 6500 K WT	Shipping carton box 6	290 mm x 165 mm x 165 mm	7.90 dm³	1317.00 g
4058075079038	DL SLIM DN 155 12 W 3000 K WT	Shipping carton box 6	290 mm x 205 mm x 195 mm	11.59 dm³	2158.00 g
4058075079052	DL SLIM DN 155 12 W 4000 K WT	Shipping carton box 6	290 mm x 205 mm x 195 mm	11.59 dm³	2158.00 g
4058075079076	DL SLIM DN 155 12 W 6500 K WT	Shipping carton box 6	290 mm x 205 mm x 195 mm	11.59 dm³	2158.00 g
4058075079090	DL SLIM DN 210 18 W 3000 K WT	Shipping carton box 6	290 mm x 270 mm x 250 mm	19.58 dm³	3439.00 g
4058075079113	DL SLIM DN 210 18 W 4000 K WT	Shipping carton box 6	290 mm x 270 mm x 250 mm	19.58 dm³	3439.00 g
4058075079137	DL SLIM DN 210 18 W 6500 K WT	Shipping carton box 6	290 mm x 270 mm x 250 mm	19.58 dm³	3439.00 g

The mentioned product code describes the smallest quantity unit which can be ordered. One shipping unit can contain one or more single products. When placing an order, for the quantity please enter single or multiples of a shipping unit.

REFERENCES / LINKS

© 2018, LEDVANCE GmbH. All rights reserved.

For Guarantee see

- www.ledvance.com/guarantee

DISCLAIMER

Subject to change without notice. Errors and omission excepted. Always make sure to use the most recent release.

© 2018, LEDVANCE GmbH. All rights reserved.