BIMCONSOLES

LOW LINE CONSOLES

BIM 2600 RANGE

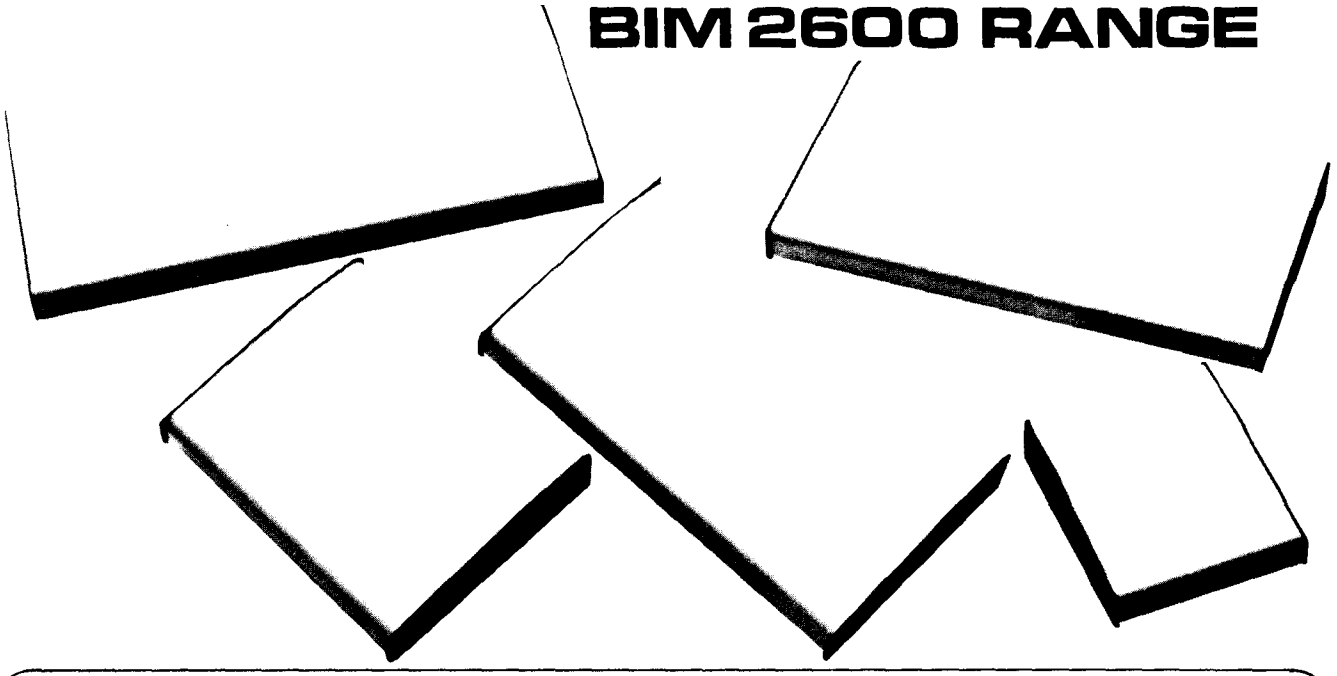

The BIM 2600 range of small and medium size desk consoles are ideally suited to applications where meters, keyboards or switches are incorporated, with adequate space also being available on the side and rear panels for mains sockets and connectors etc.

These sloping front units have been ergonomically conceived to permit comfortable operation of switches etc. yet still offer excellent display visibility.

Utilising a two piece, all aluminium, construction in which the base and top are nominally 2mm and 1.6mm thick respectively, the standard colour scheme is brown base and beige top panel, with the whole unit held rigidly together by screws running through base rubber feet into hank bushes.

Alternative colour schemes, together with special ventilation slots, keyboard cut-outs or switch punchings etc. can be included subject to normal commercial viability criteria.

Part No.	Dim A		Dim B		Dim C		Dim D		Dim E		Dim F	
	mm	ins	mm	ins	mm	ins	mm	ins	mm	ins	mm	ins
BIM 2601	178	7	210	8.25	51	2	70	2.75	140	5.50	38.5	1.5
BIM 2602	280	11	210	8.25	51	2	70	2.75	140	5.50	38.5	1.5
BIM 2603	381	15	210	8.25	51	2	70	2.75	140	5.50	38.5	1.5
BIM 2604	483	19	210	8.25	51	2	70	2.75	140	5.50	38.5	1.5
BIM 2605	483	19	261	10.25	51	2	70	2.75	191	7.50	38.5	1.5

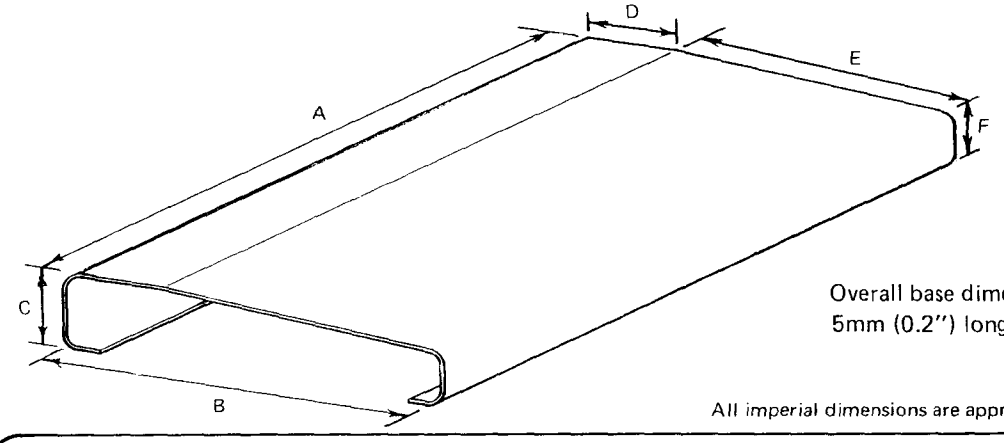

Overall base dimensions are approximately 5mm (0.2") longer than A, B and C.

All imperial dimensions are approximate millemetre equivalents

To Order Specify

	Console No.	Colour
Example	BIM 2603	brown/beige

BOSS INDUSTRIAL MOULDINGS LTD

James Carter Road, Mildenhall, Suffolk, IP28 7DE, England.

Tel: (01638) 716101 Fax: (01638) 716554