bürkert
FLUID CONTROL SYSTEMS

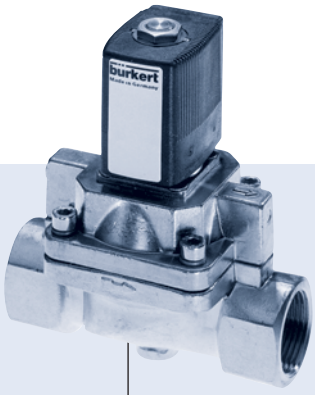

2/2-way Solenoid Valve with servo-piston for higher pressures G 1/2 - G 1

- Solenoid valve with servo-piston
- Pressure range up to 50 bar
- Push-over solenoid system

Type 5404 can be combined with...

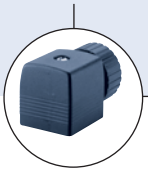

Type 2508
Cable plug



Type 1078
Timer unit



Type 2511
ASI cable plug

This pilot-controlled solenoid valve with servo-piston is suitable for the contol of liquid and gaseous media at high pressures. A minimum differential pressure of 1 bar is required to fully open the valve.

The NO version (circuit function B) has an exhaust port G 1/8 on top of the coil. The coil can be exchanged without opening the media circuit.

Circuit function A

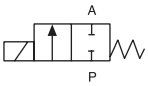

2/2-way valve, normally closed by spring force

Circuit function B

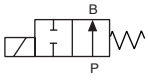

2/2-way valve, direct-acting, normally open (on request)

Technical data	
Orifice	DN 12 - 25 mm
Body material	Brass
Coil material	Polyamide
Coil insulation class	B (H on request)
Valve internals	Stainless steel, brass
Seal material	NBR, PTFE seat seal (FKM on request)
Media	Neutral media, compressed air, water, hydraulic oil
Media temperature	–10 to +90 °C
Ambient temperature	Max. +55 °C
Voltage tolerance	±10 %
Duty cycle	100% continuous rating
Electrical connection	Tag connector acc. to DIN EN 175301-803 (previously DIN 43650) Form A (see Ordering chart for accessory on next page)
Protection class	IP 65 with cable plug
Installation	As required, preferably with actuator upright

Response times	
Opening [ms]	20-400
Closing [ms]	100-1500 (depending on orifice and differential pressure)

Power consumption		
Inrush AC [VA]	**Hold (hot coil)**	
	AC [VA/W]	**DC [W]**
24	14/8	8

DTS 1000011017 EN Version: C Status: RL (released | freigegeben | validé) printed: 29.08.2013

Materials

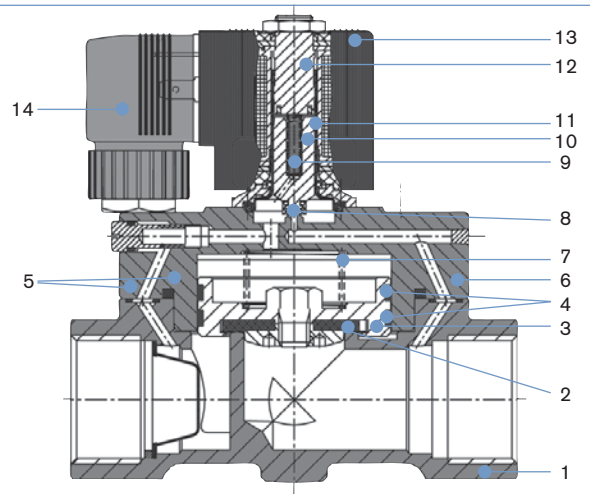

1	Valve body	Brass
2	Seal (seat)	PTFE
3	Piston	Brass
4	Piston-seal	PTFE
5	O-rings	NBR
6	Cover	Brass
7	Spring	1.4310 Stainless Steel
8	Plunger Seal	NBR (FKM optional)
9	Spring	1.4310 Stainless Steel
10	Plunger	1.4105 Stainless Steel
11	Armature guide tube:	1.4303 Stainless Steel
12	Stopper	1.4105 Stainless Steel
13	Coil	Polyamide
14	Cable plug	Polyamide

Ordering chart for valves (other versions on request)

Brass body, without cable plug

Circuit function	Port connection	Orifice [mm]	Kv value water [m³/h]	Pressure range for liquids [bar]	Pressure range for gases [bar]	Item no. per voltage/frequency [V/Hz] 024/DC	024/50	230/50
A 2/2-way valve NC 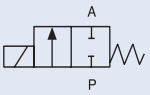	G 1/2	12	2.0	1 - 50	1 - 50	134 590	134 591	134 593
	G 3/4	20	5.0	1 - 25	1 - 32	134 594	–	–
				1 -25	1 - 40	–	134 595	134 597
	G 1	25	10.0	1 - 25	1 - 32	134 598	–	–
				1 - 25	1 - 40	–	134 599	134 601

Note: the pressure values for liquid media are shown on the rating plate!

Please note that the cable plug has to be ordered separately, see Ordering chart for accessory below and separate datasheet, Type 2508

Further versions on request

Circuit function
Circuit function NO (B)

Voltage
110/50, non-standard voltages

Approvals
UL, UR, CSA, Hazardous Locations Expl. proof, EEx m/ed

Material
Seal: FKM

Ordering chart for accessories

Cable plug Type 2508 according to DIN EN 175301-803 Form A



Circuitry	Voltage / frequency	Item no.
None (standard)	0 - 250 V AC/DC	008 376
with LED	12 - 24 V AC/DC	008 360
with LED and varistor	12 - 24 V AC/DC	008 367
with rectifier, LED and varistor	12 - 24 V AC/DC	008 363
with LED	200 - 240 V	008 362
with LED and varistor	200 - 240 V	008 369
further versions see datasheet Type 2508		

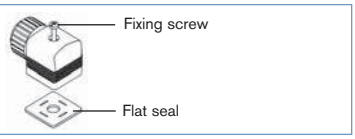

The delivery of a cable plug includes the flat seal and the fixing screw. For other cable plug versions acc. to DIN EN 175301-803 Form A (previously DIN 43650), see separate datasheet Type 2508.

DTS 1000011017 EN Version: C Status: RL (released | freigegeben | validé) printed: 29.08.2013

Dimensions [mm]

DN 12 mm

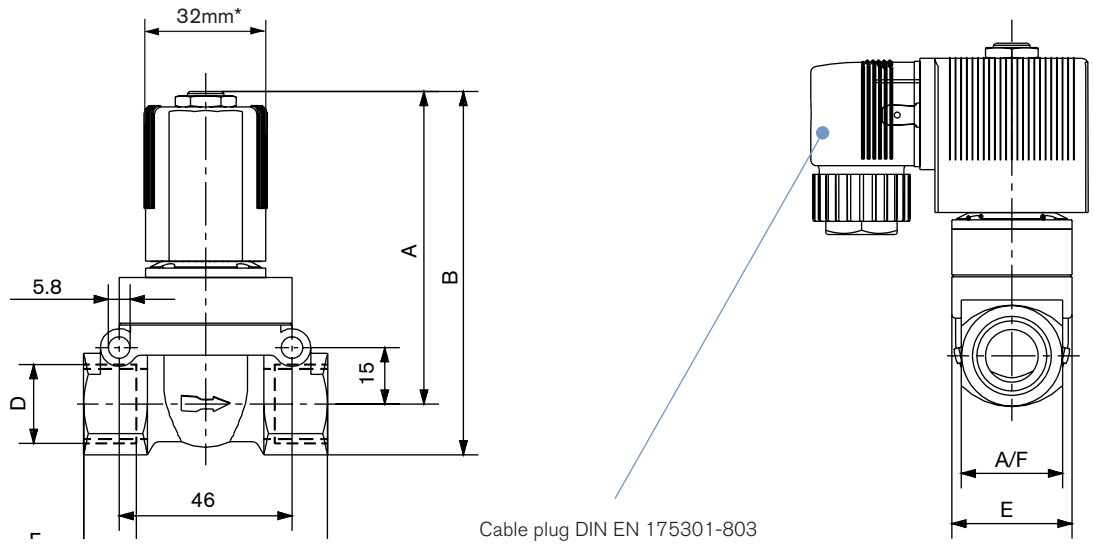

Cable plug DIN EN 175301-803
(previosly DIN 43650), form A
(0-250 V AC/DC) (not included)

DN 20/25 mm

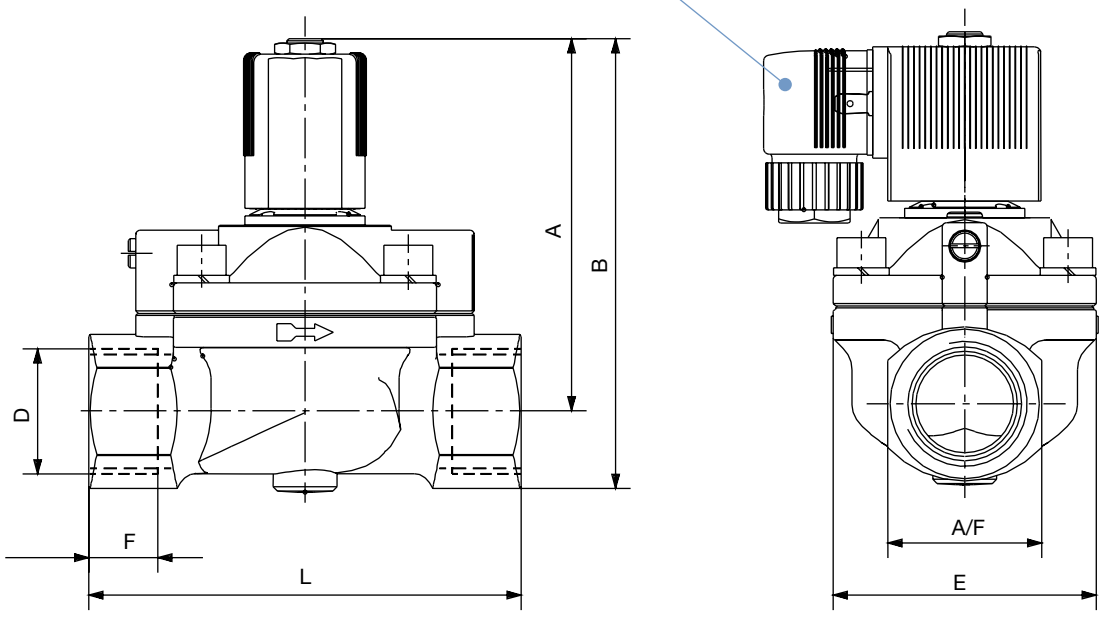

* explosion proofed version, 40mm

Variable dimensions [mm]

Port connection D	Orifice [mm]	A	B	F	E	L	A/F
G 1/2	12.0	83.00	96.5	14.0	32	65	27
G 3/4	20.0	93.0	109.0	16.0	60	100	32
G 1	25.0	99.5	119.0	18.0	70	115	41

To find your nearest Bürkert facility, click on the orange box → **www.burkert.com**

In case of special application conditions, please consult for advice.

We reserve the right to make technical changes without notice.

0612/2_EU-en_00891714

DTS 1000011017 EN Version: C Status: RL (released | freigegeben | validé) printed: 29.08.2013