Brand of NTN corporation

Technical data

EXFCE209

Bearing units



Grey cast housing, radial insert ball bearing with eccentric locking collar, seal with slinger

KIT CONTENT

EX209G2, FCE209

VISUAL (S)

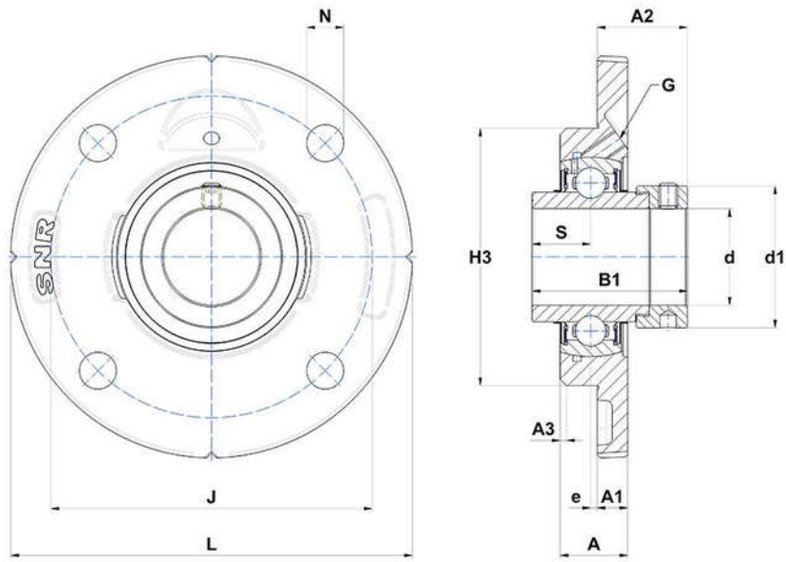

PRODUCT DEFINITION

Brand	SNR
A - Housing height	25 mm
A1 - Housing foot height / flange height	12 mm
A2 - Total height from mounting surface	32,9 mm
A3 - Centering depth / chamfer dimension	2 mm
B - Width of Inner Ring	42,8 mm

EXFCE209
Bearing units

PRODUCT DEFINITION	
B1 - Overall width Inner Ring	56,3 mm
d - Shaft diameter	45 mm
d1 - Outer dia of eccent. Lock. collar / nut of adapter sleeve	62 mm
e - Distance mounting surface to bearing center	-2 mm
G - Grease fitting	M6x1
H3 - Centering dia	105 mm
J - Mounting holes distance	130 mm
L - Housing width / diameter	155 mm
N - Mounting hole dimension	14 mm
S - Distance front side/bearing centre	21,4 mm

PRODUCT PERFORMANCE	
C - Dynamic load rating	31850000 mN
C0 - Static load rating	20800000 mN
Operating temperature min.	253,15 °K
Operating temperature max.	373,15 °K

OTHER FEATURES	
Mass	2,05 kg
Recommended tightening torque for set screw	11.5 N-m