Pressure sensor, Series PE6

R412007885

AVENTICS Series PE6 Pressure sensors

The AVENTICS Series PE6 is an electronic pressure sensor, which combines electronic precision and versatile function with ideal user friendliness.



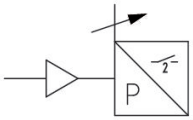

Technical information

Industry	Industrial
Output signal	2 x PNP
Type	electronic
Type	with sensor element based on piezo resistance
Mounting orientation	L (horizontal)
Operating pressure min	0 bar
Operating pressure max	10 bar
Protection against overpressure	15 bar
Switching logic	NO (make contact)
Max. shock resistance	10 g
Vibration resistance	10 - 55 Hz, 0,1 mm
Precision (% of full scale value)	± 1 %
Hysteresis	adjustable
Measurement	Relative pressure
Display	LED
Compressed air connection	Ø 1,2x1
Compressed air connection type	Flange with O-ring
Min. working pressure	0 bar
Max. working pressure	10 bar

Min. medium temperature	0 °C
Max. medium temperature	50 °C
Medium	Compressed air
Electrical connection 2, type	Plug
Electrical connection 2, thread size	M8x1
Electrical connection 2, number of poles	4-pin
Min. ambient temperature	0 °C
Max. ambient temperature	60 °C
Max. oil content of compressed air	1 mg/m³
Operating pressure display	2 LED
Switching time	< 2 ms
Resetting point	adjustable 0 ... 100%
Switching point	adjustable 0 ... 100%
Quiescent current consumption	<20 mA
Protection class	IP40
Short circuit resistance	clocking
Mounting types	via flange
Weight	0.006 kg

Material

Housing material	Polycarbonate
Seal material	Acrylonitrile butadiene rubber
Material electrical connection	Brass
Part No.	R412007885

Technical information

Notice: This product may only be operated with oil-free, dry compressed air.

Flange plate with screws and seals in scope of delivery

The pressure dew point must be at least 15 °C less than ambient and medium temperature and may not exceed 3 °C.

The oil content of compressed air must remain constant during the life cycle.

Use only the approved oils from AVENTICS. Further information can be found in the “Technical information” document (available in https://www.emerson.com/en-us/support).

PE6...-L

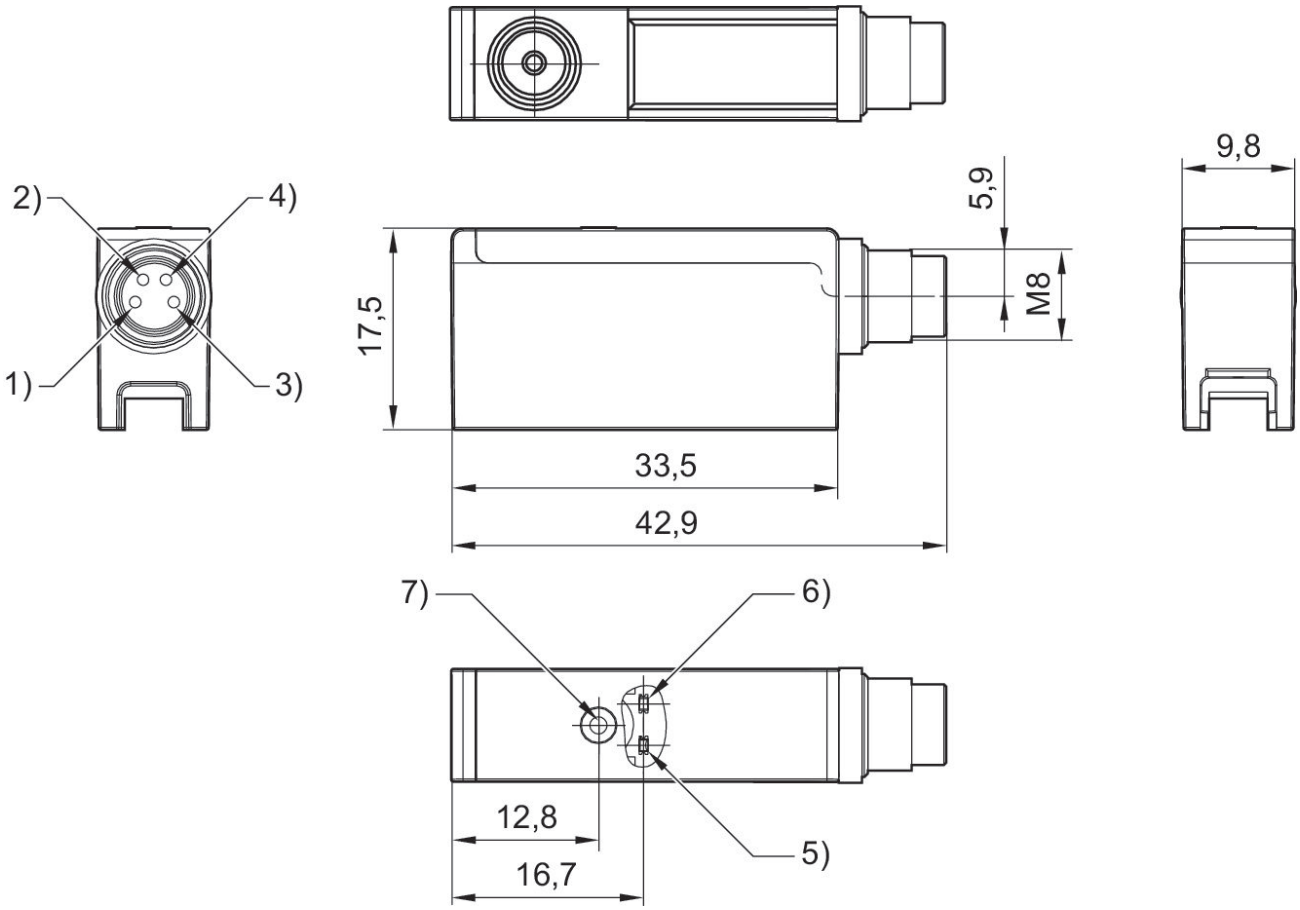

1) +UB
2) Switch output 2
3) GND
4) Switch output 1
5) LED for switch output 2 6) LED for switch output 1 7) setting knob

PE6...-S

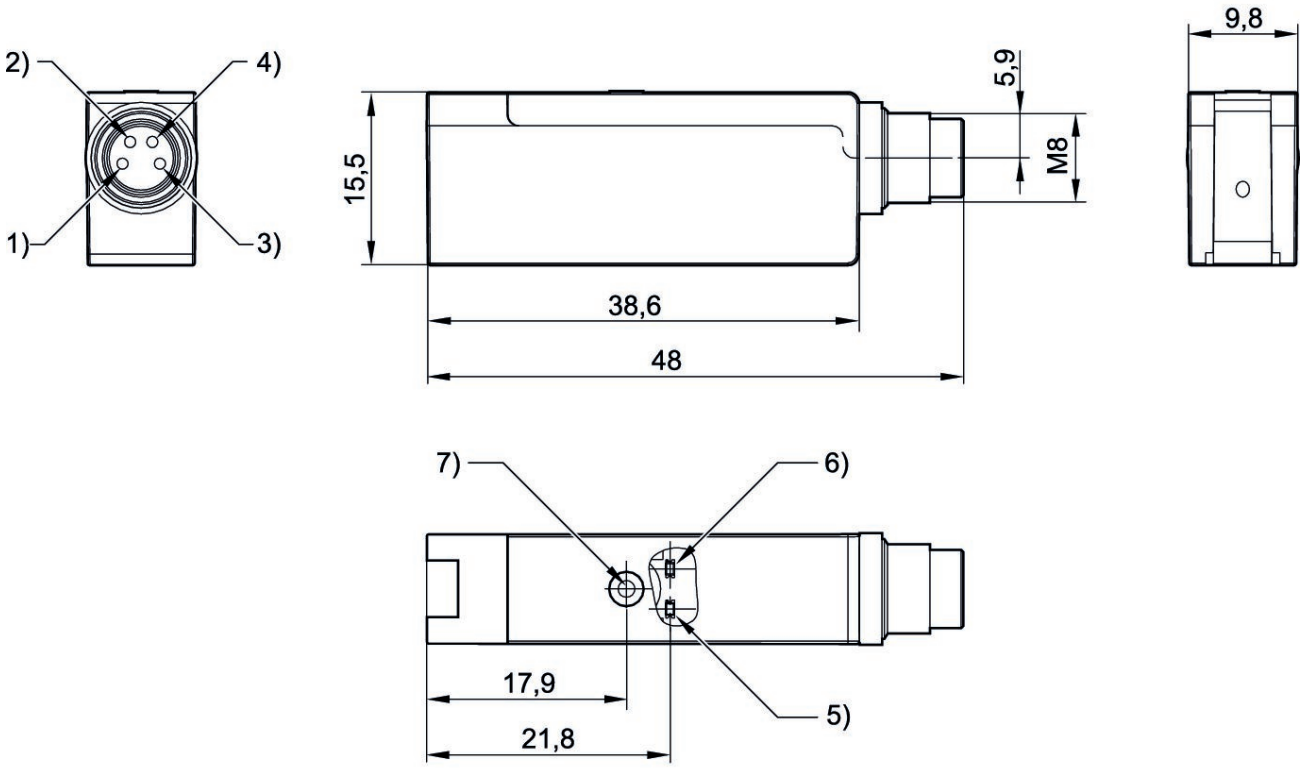

1) +UB
2) Switch output 2
3) GND
4) Switch output 1
5) LED for switch output 2 6) LED for switch output 1 7) setting knob

Flange plate

PE6

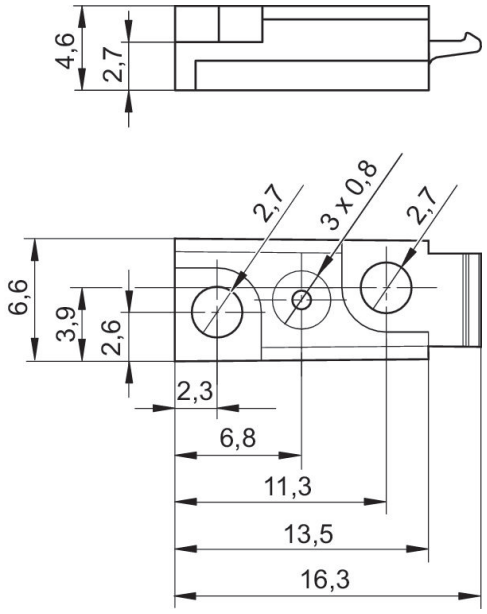

Pressure sensor

PE6...-S

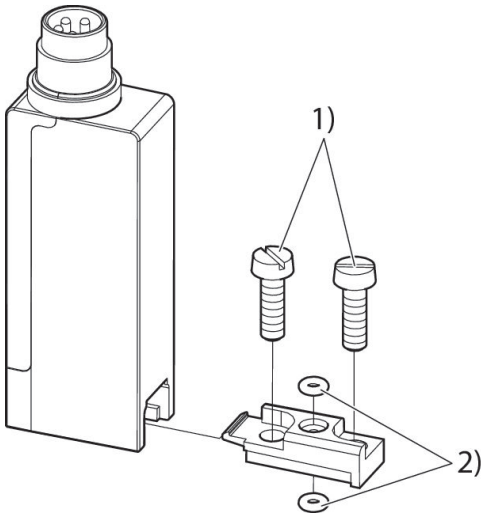

1) Cylinder screw M2,5x8
2) O-ring Ø1,2x1 (included)

Pressure sensor

PE6...-L

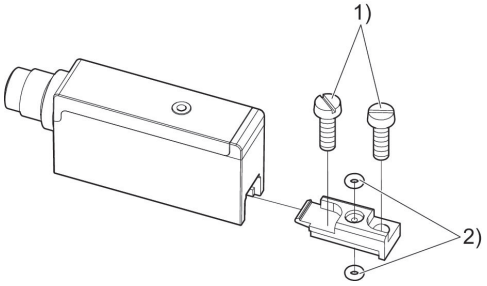

1) Cylinder screw M2,5x8
2) O-ring Ø1,2x1 (included)

Switching function (adjustable hysteresis)

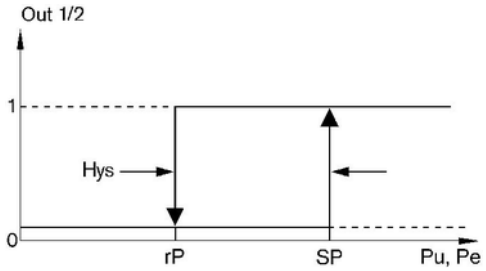

SP = switch-on point, rP = resetting point
OUT: switch output
Pu = pressure < 0 - vacuum sensor Pe = pressure > 0 - pressure sensor

Switching function (fixed hysteresis)

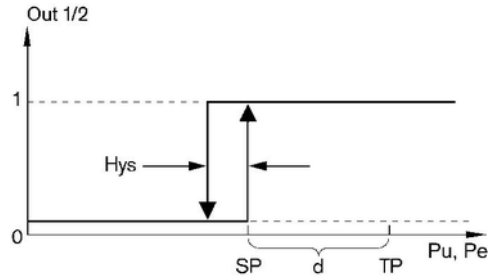

Vacuum sensor: d=20%
Pressure sensor: d=5%
SP = switch-on point, TP = teach point
OUT: switch output
Pu = pressure < 0 - vacuum sensor Pe = pressure > 0 - pressure sensor

Block diagram

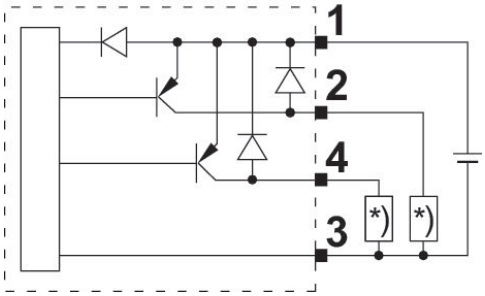

* Storable postion