52006101	DATA SHEET	LAPP
Valid from: 03.07.2018	SKINDICHT® BLK-GL-M	

The blind plug SKINDICHT® BLK-GL-M, made up of polyamide reinforced by glass fibre.
The blind plugs are used to close unengaged metric threaded openings.



Technical features:

Connecting thread	M12x1,5 up to M63x1,5 acc. to DIN 60423
Material	Polyamide, glass fibre reinforced
Temperature range	-40 °C up to +100 °C
Colour	RAL 7001 silver-grey RAL 7035 light-grey RAL 9005 black, UV-resistant
Protection class	without O-ring IP54 acc. to EN 60529 with O-ring IP68 acc. to EN 60529
Flammability	According to UL94: HB

Norm references:

CE

We reserve all rights according to DIN ISO 16016.
PD 0019/05_04.18EN

MAST1 / 05.07.2018 / freigegeben

SKINDICHT® BLK-GL-M

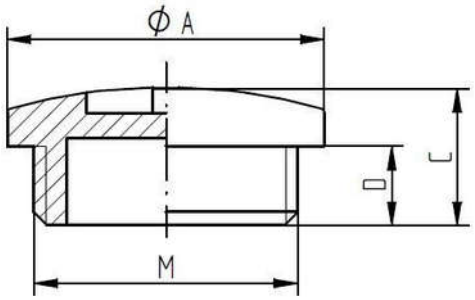

M	Ø A [mm]	C [mm]	D [mm]	Article No. RAL 7001	Article No. RAL 7035	Article No. RAL 9005
M12x1,5	15	7,9	6	52006101	52006100	52006103
M16x1,5	20	9	6	52006111	52006110	52006113
M20x1,5	24	9,5	6	52006121	52006120	52006123
M25x1,5	30	11,5	8	52006131	52006130	52006133
M32x1,5	37	12	8	52006141	52006140	52006143
M40x1,5	46	12,9	8	52006151	52006150	52006153
M50x1,5	56,1	15	10	52006161	52006160	52006163
M63x1,5	70	16,8	12	52006171	52006170	52006173

SKINDICHT® BLK-GL-M with O-ring

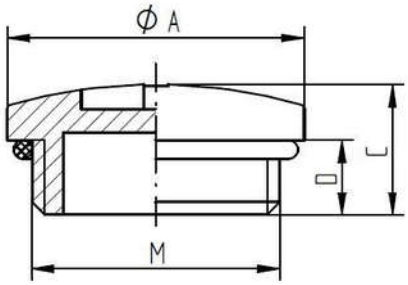

M	Ø A [mm]	C [mm]	D [mm]	O-Ring [mm]	Article No. RAL 7001	Article No. RAL 7035	Article No. RAL 9005
M12x1,5	15	7,9	6	9 x 1,5	52006109	52006107	52006106
M16x1,5	20	9	6	13 x 1,5	52006119	52006117	52006116
M20x1,5	24	9,5	6	17 x 1,5	52006129	52006127	52006126
M25x1,5	30	11,5	8	22 x 2	52006139	52006137	52006136
M32x1,5	37	12	8	28 x 2	52006149	52006147	52006146
M40x1,5	46	12,9	8	36 x 2	52006159	52006157	52006156
M50x1,5	56,1	15	10	46 x 2	52006169	52006167	52006166
M63x1,5	70	16,8	12	57 x 2	52006179	52006177	52006176

For more information please see our current catalogue. Please do not hesitate to contact our laboratory if there are any questions regarding resistance against aggressive agents and special oil.

We reserve all rights according to DIN ISO 16016.
PD 0019/05_04.18EN

MAST1 / 05.07.2018 / freigegeben