KCl Connection
for glass combinationelectrodes
extra code 829



B 20.9791.4
Installation Instructions

JUMO

06.08/00475766



All necessary actions are described in these installation instructions. However, if any difficulties should still arise during start-up, please do not carry out any manipulations on the unit. You could endanger your rights under the instrument warranty! Please contact the nearest subsidiary or the head office in such a case.

Please read these installation instructions before commissioning the instrument. Keep these operating instructions in a place which is accessible to all users at all times.

1 Application

The KCl connection serves for providing combination electrodes with KCl solution. An electrolyte bridge can be set up in conjunction with a KCl reservoir (Part No. 00060254).

We recommend using the KCl connection together with combination electrodes with a fitting length of 180 mm. This combination then has the standard fitting length of 120 mm.

1.1 Area of application

- measurements in low-ion media

measurements in media containing electrode poisons

2 Installation

The O ring (2) must not be damaged !

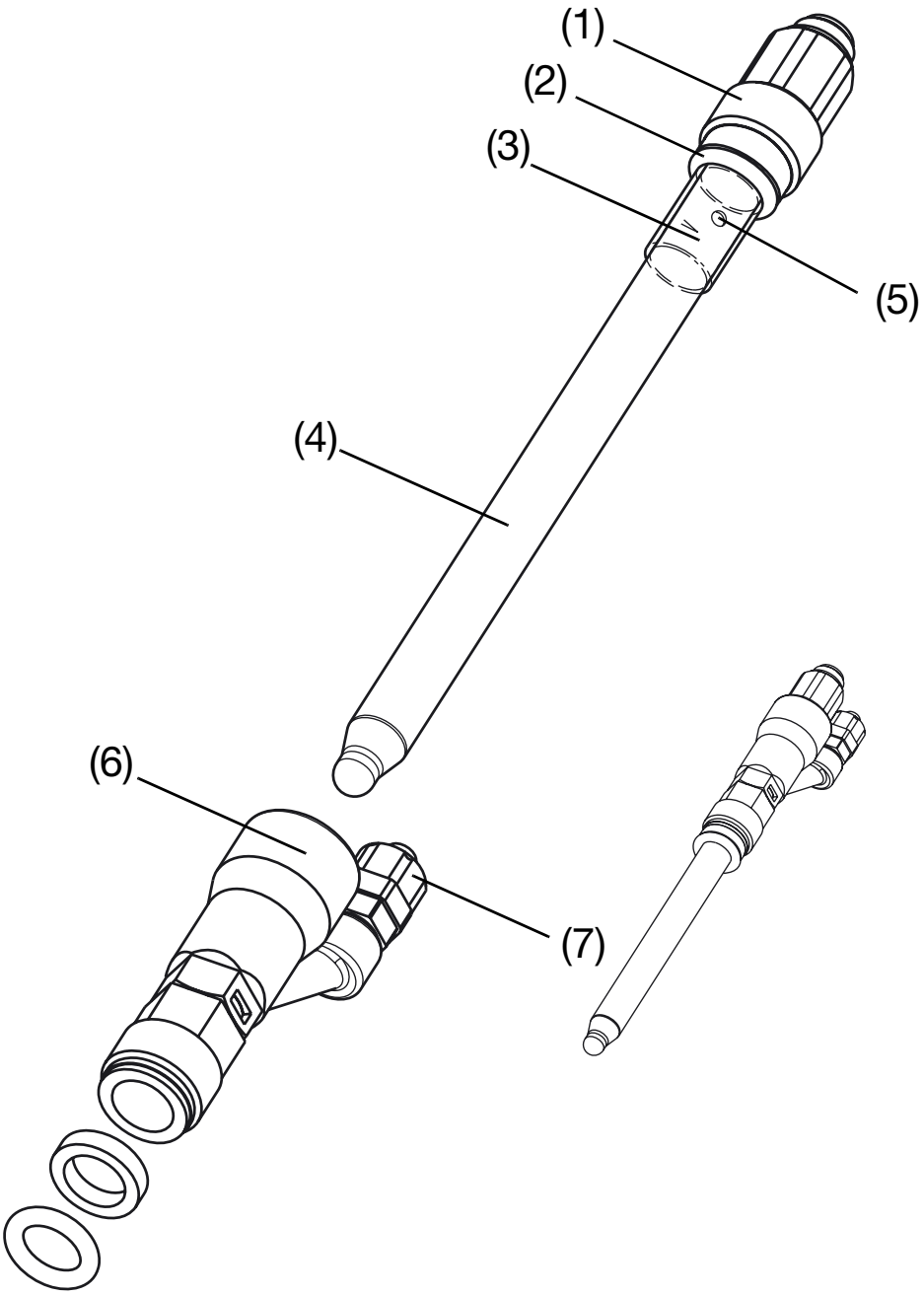

✱ Cut the tubular seal open (3) and remove it to expose the filler opening (5).

✱ Insert the combination electrode (4) into the KCl connection (6).

☞ The seal in the KCl connection (6) may make it more difficult to insert the electrode. If necessary, moisten the electrode shaft (4) with water to facilitate insertion.

✱ Screw the combination electrode (4) into the KCl connection (6) by means of the Pg13.5 screwed gland (1). Maximum tightening torque is 1.5 Nm.

✱ Push the washer (8) and the o-ring (9) onto the combination electrode.

The filling spout (7) can be connected to a KCl reservoir (e.g. Part No. 00060254) using a 6x1 dia. hose:

✱ Unscrew the union nut of the filling spout (7) and slide it onto the hose leading to the KCl reservoir.

✱ Push the hose onto the opening of the filling spout (7) and fix it with the union nut.

✱ Calibrate the combination electrode, if required.

✱ Screw the KCl connection (6) with the mounted combination electrode into the appropriate fitting.

✱ Connect the measurement cable.

☞ After installation (in the case of flow-through fittings), open any shut-off valves that may be present, in order to start the process flow.

Mount the immersion fittings in the container that is to be used (pipe clips, flange or similar)

The combination electrode is now ready for use.

2.1 Dimensions

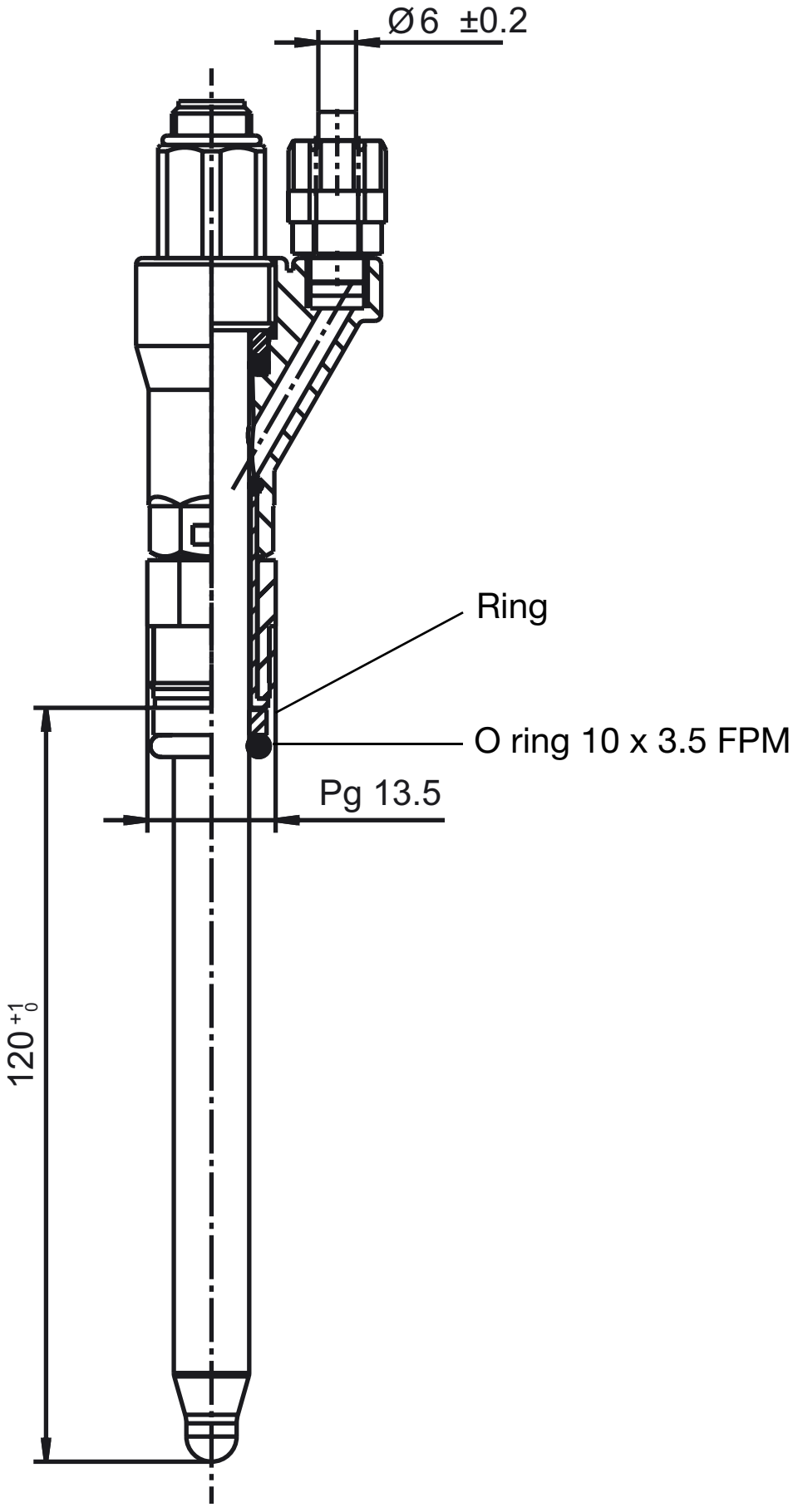

JUMO GmbH & Co. KG
Street address:
Moritz-Juchheim-Straße 1
36039 Fulda, Germany
Delivery address:
Mackenrodtstraße 14
36039 Fulda, Germany
Postal address:
36035 Fulda, Germany
Phone: +49 661 6003-0
Fax: +49 661 6003-500
e-mail: mail@jumo.net
Internet: www.jumo.net

JUMO Instrument Co. Ltd.
JUMO House
Temple Bank, Riverway
Harlow, Essex CM 20 2 TT, UK
Phone: +44 1279 635533
Fax: +44 1279 635262
e-mail: sales@jumo.co.uk
Internet: www.jumo.co.uk

JUMO Process Control, Inc.
8 Technology Boulevard
Canastota, NY 13032, USA
Phone: 315-697-JUMO
1-800-554-JUMO
Fax: 315-697-5867
e-mail: info@jumo.us
Internet: www.jumo.us