

SQUASHNI
PLATFORM SOUNDER



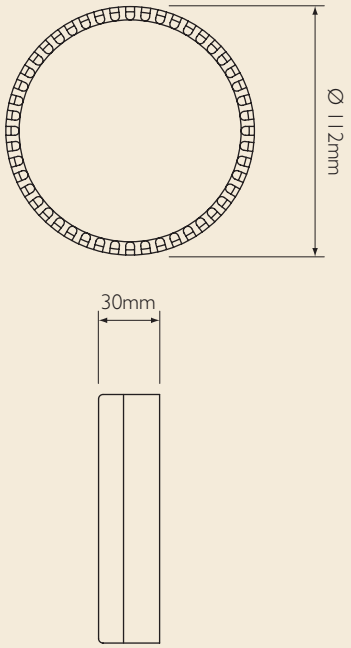

The Squashni presents the many qualities of the Roshni in the form of a base sounder for use with almost any available fire detector. The flat deck area can also be used with beacons to provide a compact audio-visual alarm device with the added economy of a single installation point.

- FIXING PLATFORM FOR DETECTORS OR BEACONS
- LOW CURRENT CONSUMPTION
- BLANK COVER FOR USE AS A STAND ALONE SOUNDER
- REDUCED INSTALLATION COSTS
- COLOUR MATCHED TO LEADING MANUFACTURERS DETECTORS
- TAMPER PROOF CAP

Specification

Voltage	9 - 28Vdc
Current	18mA (tone 3)
Sound output	93dB(A) (tone 3)
Tones	32
Volume control	20dB
Monitoring	Reverse polarity
Temperature	-10°C to +55°C
Protection	IP54
Construction	ABS
Weight	0.15Kg
Colours	Red or white