E38795

Thermowell for temperature sensors

THERMOWELL, D3/DIN10/15/20 CLAMP/EL=38

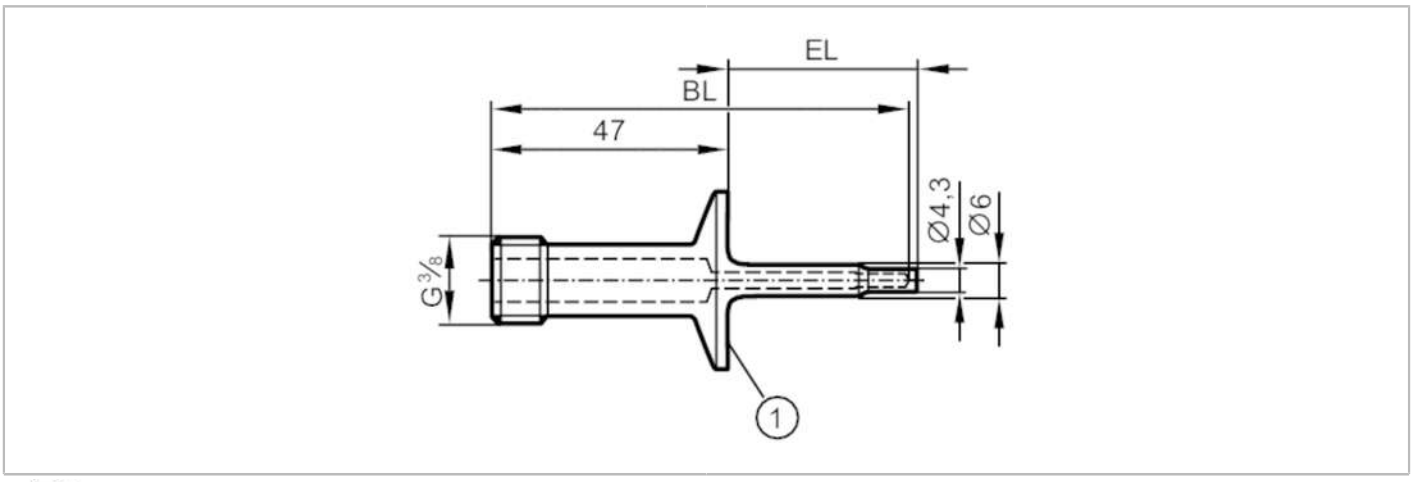

EC 1935/2004

Application		
Design		for temperature sensors EL = 83 mm
Pressure rating	[bar]	25
Mechanical data		
Weight	[g]	70
Materials		stainless steel (1.4435 / 316L)
Sensor connection		G 3/8 internal thread Ø 3 mm
Process connection		Clamp DN10...DN20 (1/2...3/4") DIN 32676 (ISO 2852)
Surface characteristics Ra/Rz of the wetted parts		< 0.4 / -
Installation length EL	[mm]	38
Bore length BL	[mm]	83
Remarks		
Pack quantity		1 pcs.