efector400

E60033

ANGLE BRACKET ENCODERS

Accessories

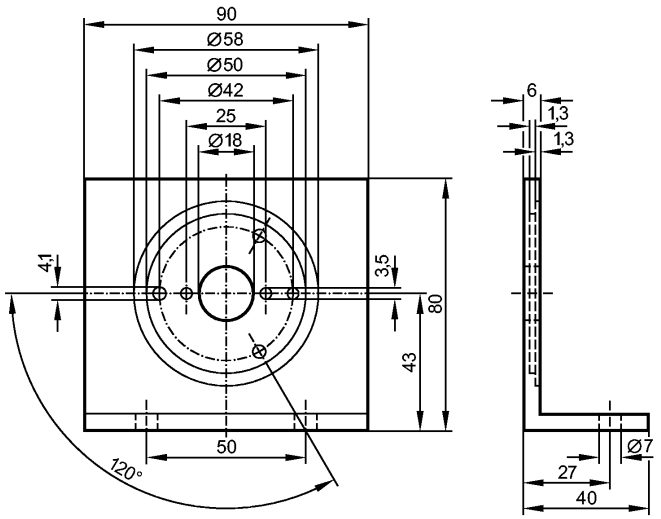

Made in Germany

Product characteristics

Angle bracket

Mechanical data

Design		for encoders for types RB, RC, RM, RN, RU
Housing materials		aluminium black anodised
Weight	[kg]	0.153

Remarks

Pack quantity	[piece]	1