PART NUMBER	ENGINEERING NUMBER	FINISH LENGTH
1300060217	103000A01F030	3.00′ +1.75″ -0 [.9M +44.5 -0]
1300060221	103000A01F060	6.00′ +3.50″ -0 [1.8M +88.9 -0]
1300060229	103000A01F090	9.00′ +3.50″ -0 [2.7M +88.9 -0]
1300060232	103000A01F120	12.00′ +6.50″ -0 [3.7M +165.1 -0]
1300060237	103000A01F150	15.00′ +6.50″ -0 [4.6M +165.1 -0]
1300060241	103000A01F200	20.00′ +6.50″ -0 [6.1M +165.1 -0]
1300060246	103000A01F250	25.00′ +12.50″ -0 [7.6M +317.5 -0]
1300060250	103000A01F300	30.00′ +12.50″ -0 [9.1M +317.5 -0]
1300060253	103000A01F350	35.00′ +12.50″ -0 [10.7M +317.5 -0]
1300060254	103000A01F400	40.00′ +12.50″ -0 [12.2M +317.5 -0]

PART NUMBER	ENGINEERING NUMBER	FINISH LENGTH
1300060257	103000A01F450	45.00′ +12.50″ -0 [13.7M +317.5 -0]
1300060258	103000A01F500	50.00′ +24.50″ -0 [15.2M +622.3 -0]

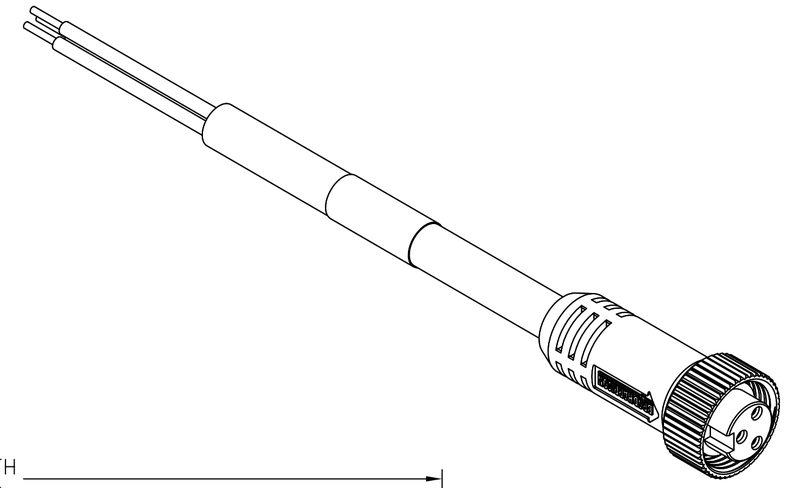

NOTE
1) MATERIAL: SEE TABLE
2) FINISHES: SEE TABLE
3) WRAP LABEL IS MARKED WITH P/N, DATE CODE, VOLTAGE & AMPERAGE
4) MATES WITH: MINI CHANGE, 3 POLE RECEPTACLE
5) ELECTRICAL DATA:
   INLINE CORDSET
   FEMALE A-SIZE WITH FLYING LEADS
   16AWG UNSHIELDED
   POLES: 3
   MAX. VOLTAGE: 600V
   MAX. CURRENT 13A
   PROTECTION IP67
   TEMPERATURE RANGE: -20°C TO 105°C
6) PACKAGING:
   CABLE ASSEMBLIES ARE BAGGED SEPERATELY IN POLY BAGS WITH BAR CODE LABEL ATTACHED TO OUTSIDE OF BAG.
7)ASSEMBLY IS RoHS COMPLIANT.
8)CERTIFICATION
   UL RECOGNIZED, FILE NO. E152210
   CSA CERTIFIED, FILE NO. LR6837

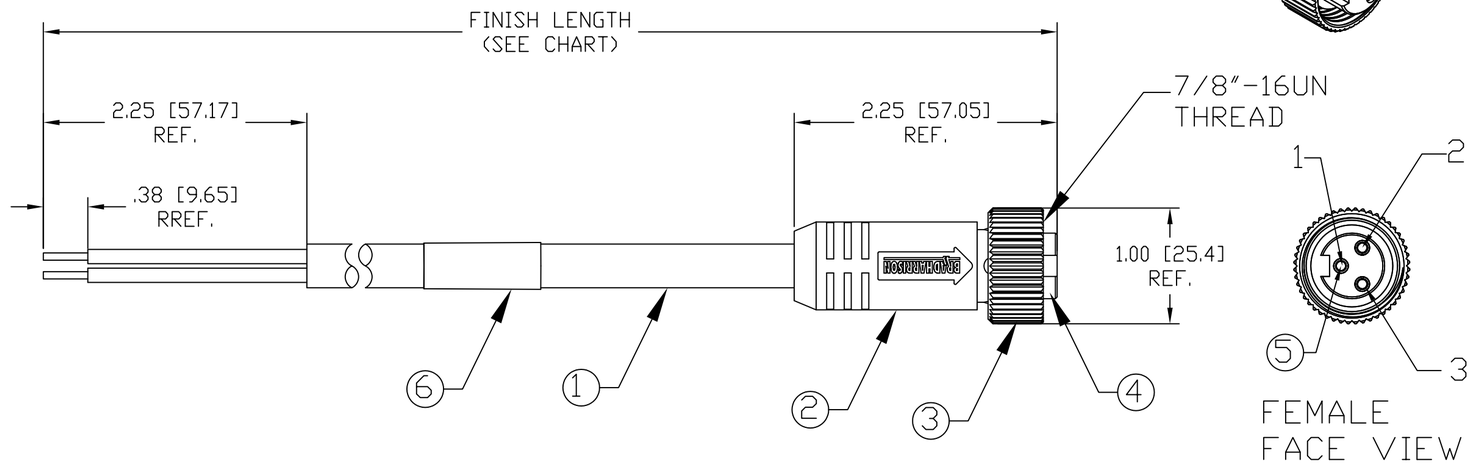

P1

1	GREEN/YELLOW-GRD
2	BLACK
3	WHITE

WIRING DIAGRAM

ITEM	QTY.	DESCRIPTION	MATERIAL	FINISH
6	1	LABEL	PLASTIC FILM	BLACK/YELLOW
5	3	CONTACT SOCKET	COPPER ALLOY	GOLD PLATED
4	1	INSERT	PVC	YELLOW
3	1	COUPLING NUT	ZINC DIE CAST	BLACKE-COATED
2	1	OVERMOLD	PVC	YELLOW
1	1	CABLE, 16AWG-3 TYPE STOOW	PVC	YELLOW

CORRECT COLOR ROTATION
EC NO: WNA2010-0389 12/17/09 —
DRWN: TWOLDEGE
CH'KD: BWOODMAN
APPR: JFMURPHY 2010/01/04
DESCRIPTION
B
REV

QUALITY SYMBOL
▼=0
Ⓒ=0

GENERAL TOLERANCES (UNLESS SPECIFIED)

	mm	INCH
4 PLACES	±----	±---
3 PLACES	±.005	±.005
2 PLACES	±.013	±.010
1 PLACE	±.025	±.020
ANGULAR ±1/2°		

DRAFT WHERE APPLICABLE MUST REMAIN WITHIN DIMENSIONS

DIMENSION STYLE: IN/MM
SCALE: 1:1
DESIGN UNITS: INCH
THIRD ANGLE PROJECTION

DRAWN BY DATE: TWOLDEGE 2009/07/10
CHECKED BY DATE: BWOODMAN 2009/07/10
APPROVED BY DATE: JFMURPHY 2010/01/04

TITLE
MINI CHANGE ASSEMBLY
3-POLE FEMALE ST
16/3AWG PVC

molex MOLEX INCORPORATED

MATERIAL NO.: SEE CHART
DOCUMENT NO.: SD-130006-008
SHEET NO.: 1 0F 1

SIZE C

THIS DRAWING CONTAINS INFORMATION THAT IS PROPRIETARY TO MOLEX INCORPORATED AND SHOULD NOT BE USED WITHOUT WRITTEN PERMISSION