KI001A

Capacitive sensor

KIE2150NFBOA/3D

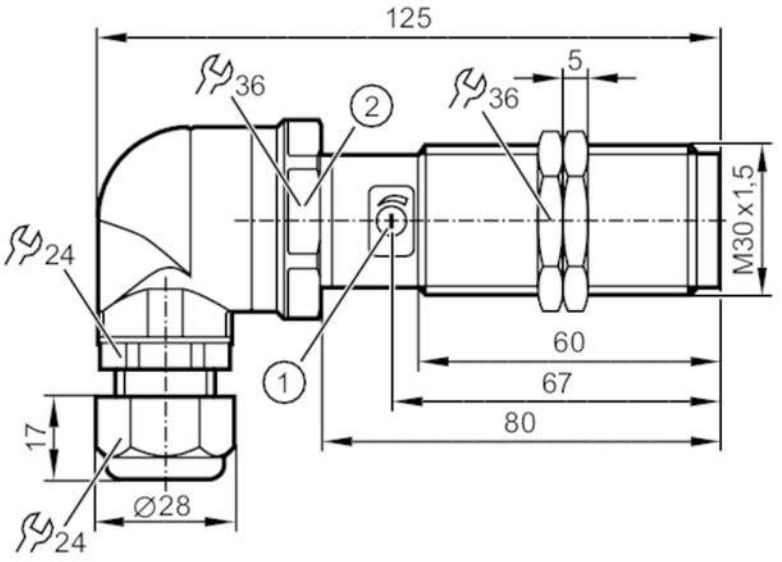

1 potentiometer
2 Tightening torque 10 Nm

Product characteristics		
Output function		normally open / normally closed; (selectable)
Sensing range	[mm]	15
Housing		threaded type
Dimensions	[mm]	M30 x 1.5 / L = 125
Electrical data		
Operating voltage	[V]	30...250 AC / 20...250 DC
Protection class		II
Reverse polarity protection		yes
Measuring principle		capacitive
Outputs		
Output function		normally open / normally closed; (selectable)
Max. voltage drop switching output DC	[V]	8
Max. voltage drop switching output AC	[V]	10
Minimum load current	[mA]	5
Max. leakage current	[mA]	2.5 (250 V AC) / 1.7 (110 V AC) / 1.5 (24 V DC)
Permanent current rating of switching output AC	[mA]	100; (150 (...40 °C))
Permanent current rating of switching output DC	[mA]	100; (150 (...40 °C))
Short-time current rating of switching output	[mA]	1000; (20ms / 0,5Hz)
Switching frequency AC	[Hz]	10
Switching frequency DC	[Hz]	10
Notes on switching frequency	[Hz]	only for resistive loads; 2 Hz for utilisation category AC-140

KI001A

Capacitive sensor

KIE2150NFBOA/3D

Short-circuit proof		no	
Overload protection		no	
Detection zone			
Sensing range	[mm]	15	
Sensing range adjustable		yes	
Factory setting sensing range	[mm]	15	
Real sensing range Sr	[mm]	15 ± 10 %	
Accuracy / deviations			
Correction factor		glass: 0.4 / water: 1 / ceramics: 0.2 / PVC: 0.2	
Hysteresis	[% of Sr]	1...15	
Switch point drift	[% of Sr]	-20...20	
Operating conditions			
Ambient temperature	[°C]	-20...60	
Protection		IP 65; IP 67	
Tests / approvals			
ATEX marking		II 3D Ex tc IIIC T90°C Dc X	
EMC		EN 61000-4-2 ESD	kV / 8 kV AD
		EN 61000-4-3 HF radiated	3 V/m
		EN 61000-4-4 Burst	2 kV
		EN 61000-4-5 Surge	1 kV line to line, Ri: 2 Ohm
		EN 61000-4-6 HF conducted	3 V
		EN 55011	class B
MTTF	[years]	305	
Mechanical data			
Weight	[g]	156.5	
Housing		threaded type	
Mounting		non-flush mountable	
Dimensions	[mm]	M30 x 1.5 / L = 125	
Thread designation		M30 x 1.5	
Materials		PBT; PA	
Displays / operating elements			
Display		switching status	1 x LED, yellow
Electrical connection			
Required protection		miniature fuse to IEC60127-2 sheet 1; ≤ 2 A; fast acting; Place the fuse outside the hazardous area.	
Accessories			
Items supplied		lock nuts: 2	
Remarks			
Remarks		Recommendation: Check the safe functioning of the unit after a short circuit.	
Pack quantity		1 pcs.	

KI001A

Capacitive sensor

KIE2150NFBOA/3D

Electrical connection

terminals: 0.34...2.5 mm²; Cable sheath: Ø 5...9 mm; Cable gland: M20 X 1.5

Connection

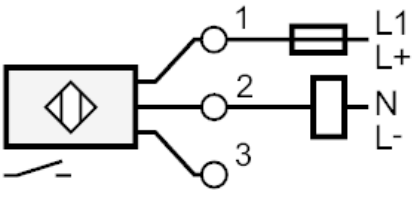

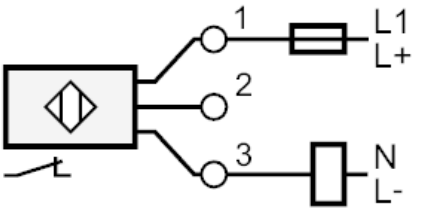

Note miniature fuse to IEC60127-2 sheet 1 ≤ 2 A fast acting
Place the fuse outside the hazardous area.