JUMO GmbH & Co. KG
Delivery address: Mackenrodtstraße 14
36039 Fulda, Germany
Postal address: 36035 Fulda, Germany
Phone: +49 661 6003-0
Fax: +49 661 6003-607
E-mail: mail@jumo.net
Internet: www.jumo.net

JUMO Instrument Co. Ltd.
JUMO House
Temple Bank, Riverway
Harlow, Essex CM20 2DY, UK
Phone: +44 1279 635533
Fax: +44 1279 635262
E-mail: sales@jumo.co.uk
Internet: www.jumo.co.uk

JUMO Process Control, Inc.
8 Technology Boulevard
Canastota, NY 13032, USA
Phone: 315-697-5866
1-800-554-JUMO
Fax: 315-697-5867
E-mail: info@jumo.us
Internet: www.jumo.us

Push-in RTD Temperature Probe with Connecting Cable



- **Temperature range from -50 to +400 °C**
- **As single or double RTD temperature probe**
- **In 2-wire, 3-wire or 4-wire-circuit**
- **Connecting cable PVC, silicone, PTFE, metal braiding**

Push-in RTD temperature probes are mainly used for measuring temperature in liquids and gasses. The application areas, among others, are the air conditioning and refrigeration industry, in the construction of heating systems/furnaces/equipment, and in laboratory technology.
Depending on the version, the connection cables are suitable for dry or moist rooms with a temperature range between -50 to +400 °C. The connecting cable transition points are strain-relieved. An anti-kink protection is available as an option.
A Pt100 temperature sensing element according to DIN EN 60751, class b in 2-wire circuit is used as a measuring insert by default – versions with Pt500 or Pt1000 are also possible. The connection is also available in 3-wire and 4-wire circuits as an option.

Technical data

Connection	Cable ends stripped bare, with ferrules available with push-on contacts or multi-pole plug connector
Connecting cable	PVC, ambient temperature -5 to +80 °C (+105 °C) PUR, ambient temperature -5 (+5) to +105 °C Silicone, ambient temperature -50 to +180 °C PTFE, ambient temperature -50 to +260 °C Metal braiding, ambient temperature -50 to +260 °C (+350 °C / +400 °C)
Protection tube	Stainless steel 1.4571, Ø 3 mm, Ø 4 mm, Ø 5 mm, Ø 5.2 mm, Ø 6 mm, and Ø 8 mm
Measuring insert	Pt100 temperature sensing element, DIN EN 60751, class B, 2-wire circuit
Response times	In water 0.4 m/s / in air 3.0 m/s Ø 6 mm: water $t_{0.5}$ approx. 4 s, $t_{0.9}$ approx. 10 s / in air $t_{0.5}$ approx. 32 s, $t_{0.9}$ approx. 98 s Ø 8 mm: water $t_{0.5}$ approx. 7 s, $t_{0.9}$ approx. 18 s / in air $t_{0.5}$ approx. 50 s, $t_{0.9}$ approx. 140 s
Accessories	For pipe screw connections and flanges refer to data sheet 909750

JUMO GmbH & Co. KG
Delivery address: Mackenrodtstraße 14
36039 Fulda, Germany
Postal address: 36035 Fulda, Germany
Phone: +49 661 6003-0
Fax: +49 661 6003-607
E-mail: mail@jumo.net
Internet: www.jumo.net

JUMO Instrument Co. Ltd.
JUMO House
Temple Bank, Riverway
Harlow, Essex CM20 2DY, UK
Phone: +44 1279 635533
Fax: +44 1279 635262
E-mail: sales@jumo.co.uk
Internet: www.jumo.co.uk

JUMO Process Control, Inc.
8 Technology Boulevard
Canastota, NY 13032, USA
Phone: 315-697-5866
1-800-554-JUMO
Fax: 315-697-5867
E-mail: info@jumo.us
Internet: www.jumo.us

Dimensions

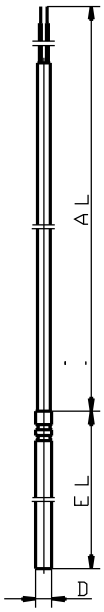

Basic type 902150/10

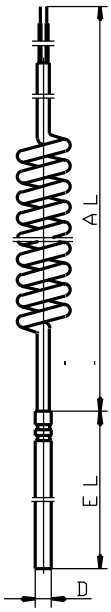

Basic type 902150/20

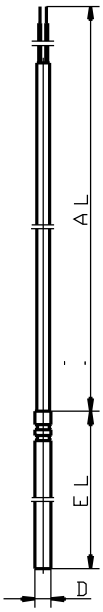

Basic type 902150/30

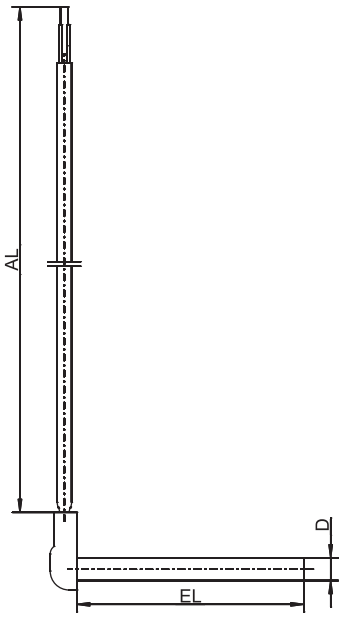

Basic type 902150/40

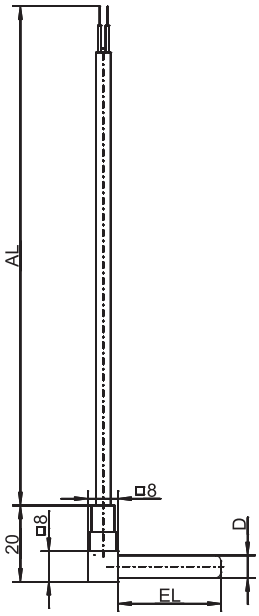

Basic type 902150/42

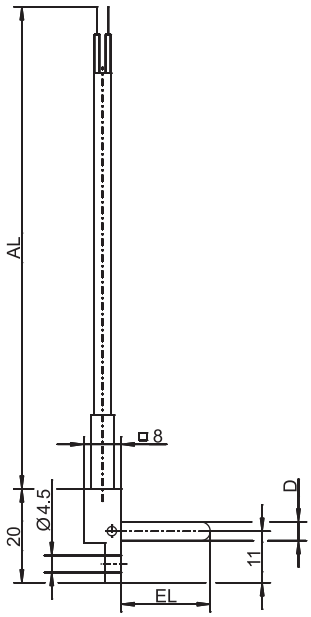

Basic type 902150/44

JUMO GmbH & Co. KG
Delivery address: Mackenrodtstraße 14
36039 Fulda, Germany
Postal address: 36035 Fulda, Germany
Phone: +49 661 6003-0
Fax: +49 661 6003-607
E-mail: mail@jumo.net
Internet: www.jumo.net

JUMO Instrument Co. Ltd.
JUMO House
Temple Bank, Riverway
Harlow, Essex CM20 2DY, UK
Phone: +44 1279 635533
Fax: +44 1279 635262
E-mail: sales@jumo.co.uk
Internet: www.jumo.co.uk

JUMO Process Control, Inc.
8 Technology Boulevard
Canastota, NY 13032, USA
Phone: 315-697-5866
1-800-554-JUMO
Fax: 315-697-5867
E-mail: info@jumo.us
Internet: www.jumo.us

Order details: Push-in RTD temperature probe with connecting cable

(1) Basic type

		902150/10	Push-in RTD temperature probe with connecting cable, single-section protection tube made of stainless steel
		902150/20	Push-in RTD temperature probe with spiral connecting cable, single-section protection tube made of stainless steel

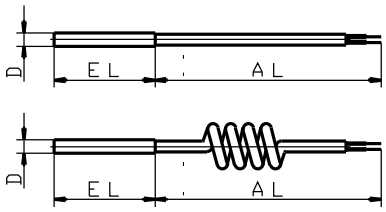

			(2) Operating temperature in °C/connecting cable
x		378	-50 to +180 °C / silicone
x		386	-50 to +260 °C / PTFE
x		388	-50 to +260 °C / metal braiding
x		402	-50 to +400 °C / metal braiding
x		724	-5 to +80 °C / PVC
x	x	730	-5 to +105 °C / PVC or PUR
x		912	5 to +105 °C / PUR (only with 1x Pt100 in 2-wire circuit)
			(3) Measuring insert
x		1001	1x Pt 100 in 3-wire-circuit
x	x	1003	1x Pt 100 in 2-wire circuit
x		1011	1x Pt 100 in 4-wire circuit
x		2001	2x Pt 100 in 3-wire-circuit
x		2003	2x Pt 100 in 2-wire circuit
			(4) Tolerance class according to DIN EN 60751
x	x	1	Class B (standard)
x	x	2	Class A
			(5) Protection tube diameter D in mm
x		3	Ø 3 mm (only as 1x Pt100 in 2-wire circuit with PTFE connecting cable)
x		4	Ø 4 mm (only as 1x Pt100 in 2-wire circuit with silicone, PTFE connecting cable, or metal braid)
x		5	Ø 5 mm
x		5.2	Ø 5.2 mm
x	x	6	Ø 6 mm
			(6) Insertion length EL in mm
x		30	30 mm (standard with D 3 mm and D 4 mm)
x		45	45 mm (standard with D 5 mm and D 5.2 mm)
x	x	50	50 mm (not for D < 6 mm)
x		60	60 mm (not for D < 6 mm)
			(7) Connecting cable end
x	x	03	Blank connection wires
x	x	11	Ferrules (standard)
x	x	13	Push-on contact 6.3
x	x	80	Multi-pole plug connector (specify type in plain text)
			(8) Connecting cable length AL in mm (AL 500 to 500,000 mm for basic type 902150/10
	x	1100	1,100 mm (effective)
x		1500	1,500 mm
x		2500	2,500 mm
x		...	Please specify in plain text (500 mm steps)
			(9) Extra codes
x	x	000	Without extra code
x		315	Strain relief spring
x		316	Strain-relief spring hose
x	x	317	Shielded connecting cable
x		858	Waterproof, protection type IP65 (only for EL 60 mm with PUR or silicone connecting cable)

	(1)		(2)		(3)		(4)		(5)		(6)		(7)		(8)		(9)	
Order code		-		-		-		-		-		-		-		/		, ...[1]
Order example	902150/10	-	378	-	1001	-	1	-	6	-	50	-	11	-	2500	/	000	

[1] List extra codes in sequence, separated by commas.

JUMO GmbH & Co. KG
Delivery address: Mackenrodtstraße 14
36039 Fulda, Germany
Postal address: 36035 Fulda, Germany
Phone: +49 661 6003-0
Fax: +49 661 6003-607
E-mail: mail@jumo.net
Internet: www.jumo.net

JUMO Instrument Co. Ltd.
JUMO House
Temple Bank, Riverway
Harlow, Essex CM20 2DY, UK
Phone: +44 1279 635533
Fax: +44 1279 635262
E-mail: sales@jumo.co.uk
Internet: www.jumo.co.uk

JUMO Process Control, Inc.
8 Technology Boulevard
Canastota, NY 13032, USA
Phone: 315-697-5866
1-800-554-JUMO
Fax: 315-697-5867
E-mail: info@jumo.us
Internet: www.jumo.us

Order details: Push-in RTD temperature probe with connecting cable

			(1)	**Basic type**
		902150/30		Push-in RTD temperature probe with connecting cable, multi-part protection tube (welded) made of stainless steel
		902150/40		Push-in RTD temperature probe with connecting cable, multi-part protection tube right-angled (welded) made of stainless steel
			(2)	**Operating temperature in °C / connecting cable**
x		378		-50 to +180 °C / silicone
x		386		-50 to +260 °C / PTFE
x		388		-50 to +260 °C / metal braiding
	x	397		-50 to +350 °C / metal braiding
x		402		-50 to +400 °C / metal braiding
x		724		-5 to +80 °C / PVC
x		912		5 to +105 °C / PUR (only with 1x Pt100 in 2-wire circuit)
			(3)	**Measuring insert**
x		1001		1x Pt 100 in 3-wire-circuit
x	x	1003		1x Pt 100 in 2-wire circuit
x		1011		1x Pt 100 in 4-wire circuit
x		2001		2x Pt 100 in 3-wire-circuit
x	x	2003		2x Pt 100 in 2-wire circuit
			(4)	**Tolerance class according to DIN EN 60751**
x	x	1		Class B (standard)
x	x	2		Class A
			(5)	**Protection tube diameter D in mm**
x	x	6		Ø 6 mm
x		8		Ø 8 mm
			(6)	**Insertion length EL in mm (EL 50 to 500 mm)**
x	x	50		50 mm
x	x	60		60 mm
x	x	100		100 mm
x	x	150		150 mm
x	x	200		200 mm
x	x	...		Please specify in plain text (50 mm steps)
			(7)	**Connecting cable end**
x	x	03		Blank connection wires
x	x	11		Ferrules (standard)
x	x	13		Push-on contact 6.3
x	x	80		Multi-pole connector (specify type in plain text)
			(8)	**Connecting cable length AL in mm (500 to 500,000 mm)**
x	x	2500		2,500 mm
x	x	...		Please specify in plain text (500 mm steps)
			(9)	**Extra codes**
x		000		Without extra code
x		310		Protection tube offset
x		315		Strain relief spring
x		316		Strain-relief spring hose
x	x	317		Shielded connecting cable

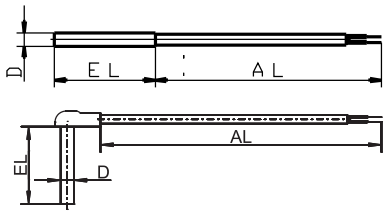

	(1)		(2)		(3)		(4)		(5)		(6)		(7)		(8)		(9)	
Order code		-		-		-		-		-		-		-		/		, ...[1]
Order example	902150/30	-	378	-	1001	-	1	-	6	-	50	-	11	-	2500	/	000	

[1] List extra codes in sequence, separated by commas.

JUMO GmbH & Co. KG
Delivery address: Mackenrodtstraße 14
36039 Fulda, Germany
Postal address: 36035 Fulda, Germany
Phone: +49 661 6003-0
Fax: +49 661 6003-607
E-mail: mail@jumo.net
Internet: www.jumo.net

JUMO Instrument Co. Ltd.
JUMO House
Temple Bank, Riverway
Harlow, Essex CM20 2DY, UK
Phone: +44 1279 635533
Fax: +44 1279 635262
E-mail: sales@jumo.co.uk
Internet: www.jumo.co.uk

JUMO Process Control, Inc.
8 Technology Boulevard
Canastota, NY 13032, USA
Phone: 315-697-5866
1-800-554-JUMO
Fax: 315-697-5867
E-mail: info@jumo.us
Internet: www.jumo.us

Order details: Push-in RTD temperature probe with connecting cable

			(1)	**Basic type**
		902150/42		Push-in RTD temperature probe with connecting cable, single-section protection tube right-angled made of stainless steel
		902150/44		Push-in RTD temperature probe with connecting cable and mounting borehole, single-section protection tube right-angled made of stainless steel
			(2)	**Operating temperature in °C / connecting cable**
x	x	388		-50 to +260 °C / metal braiding
			(3)	**Measuring insert**
x	x	1003		1x Pt 100 in 2-wire circuit
x		1011		1x Pt 100 in 4-wire circuit
x		2003		2x Pt 100 in 2-wire circuit
			(4)	**Tolerance class according to DIN EN 60751**
x	x	1		Class B (standard)
x	x	2		Class A
			(5)	**Protection tube diameter D in mm**
	x	4		Ø 4 mm
x		6		Ø 6 mm
			(6)	**Insertion length EL in mm**
	x	9		9 mm
	x	12		12 mm
x		20		20 mm
x		50		50 mm
			(7)	**Connecting cable end**
x	x	03		Blank connection wires
x	x	11		Ferrules (standard)
x	x	13		Push-on contact 6.3
x	x	80		Multi-pole connector (specify type in plain text)
			(8)	**Connecting cable length AL in mm (500 to 500,000 mm)**
x	x	2500		2,500 mm
x	x	...		Please specify in plain text (500 mm steps)
			(9)	**Extra codes**
x	x	000		Without extra code
x	x	315		Strain relief spring
x	x	317		Shielded connecting cable

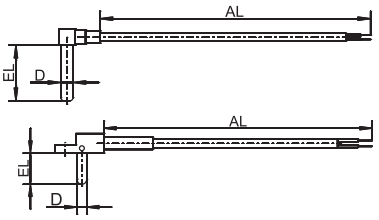

	(1)		(2)		(3)		(4)		(5)		(6)		(7)		(8)		(9)	
Order code		-		-		-		-		-		-		-		/		, ...[1]
Order example	902150/42	-	388	-	1003	-	1	-	6	-	20	-	03	-	2500	/	000	

[1] List extra codes in sequence, separated by commas.

JUMO GmbH & Co. KG
Delivery address: Mackenrodtstraße 14
36039 Fulda, Germany
Postal address: 36035 Fulda, Germany
Phone: +49 661 6003-0
Fax: +49 661 6003-607
E-mail: mail@jumo.net
Internet: www.jumo.net

JUMO Instrument Co. Ltd.
JUMO House
Temple Bank, Riverway
Harlow, Essex CM20 2DY, UK
Phone: +44 1279 635533
Fax: +44 1279 635262
E-mail: sales@jumo.co.uk
Internet: www.jumo.co.uk

JUMO Process Control, Inc.
8 Technology Boulevard
Canastota, NY 13032, USA
Phone: 315-697-5866
1-800-554-JUMO
Fax: 315-697-5867
E-mail: info@jumo.us
Internet: www.jumo.us

Stock versions

(1)		(2)		(3)		(4)		(5)		(6)		(7)		(8)		(9)	Part no.
902150/10	-	378	-	1003	-	1	-	5.2	-	45	-	11	-	2500	/	000	00326037
902150/10	-	378	-	1003	-	1	-	6	-	50	-	11	-	2500	/	000	00389771
902150/10	-	378	-	1003	-	1	-	6	-	50	-	11	-	1500	/	000	00085313
902150/10	-	378	-	1001	-	1	-	6	-	50	-	11	-	2500	/	000	00392513
902150/10	-	378	-	1003	-	1	-	6	-	60	-	11	-	2500	/	631	00492541
902150/10	-	402	-	1003	-	1	-	6	-	50	-	11	-	1500	/	317	00085311
902150/10	-	724	-	1003	-	1	-	6	-	50	-	11	-	2500	/	000	00059085
902150/10	-	724	-	1003	-	1	-	6	-	50	-	11	-	1500	/	000	00085315
902150/10	-	730	-	1003	-	1	-	6	-	50	-	11	-	1500	/	000	00085316
902150/10	-	730	-	1003	-	1	-	6	-	60	-	11	-	2500	/	631	00492539
902150/20	-	730	-	1003	-	1	-	6	-	50	-	11	-	1100	/	000	00065495
902150/30	-	388	-	1003	-	1	-	6	-	50	-	11	-	2500	/	315.317	00055718
902150/30	-	388	-	1003	-	1	-	6	-	100	-	11	-	2500	/	315.317	00055719
902150/30	-	388	-	1001	-	1	-	6	-	50	-	11	-	2500	/	315.317	00065451
902150/30	-	388	-	1001	-	1	-	6	-	100	-	11	-	2500	/	315.317	00065453
902150/30	-	402	-	1001	-	1	-	6	-	150	-	11	-	2500	/	315.317	00549701
902150/40	-	397	-	1003	-	1	-	6	-	60	-	11	-	2500	/	317	00055715