E12716

Damping magnet

MAGNET M7.0 IATA E12540 5X

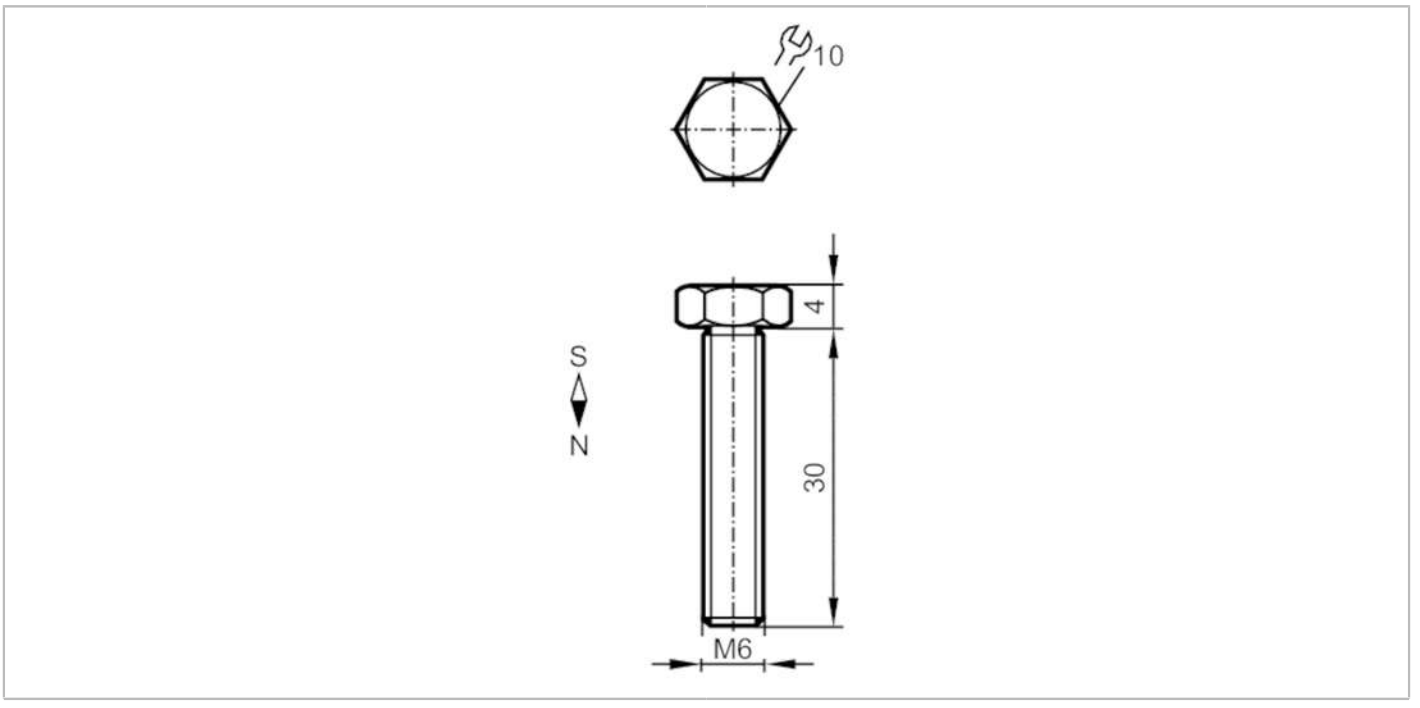

Operating conditions		
Ambient temperature	[°C]	-40...80
Mechanical data		
Weight	[g]	88
Dimensions	[mm]	M6 / L = 33.5
Thread designation		M6
Materials		neodymium galvanised
Magnetic field strength	[mT]	220
Remarks		
Pack quantity		5 pcs.