Low-profile Relay with Various Models

- Low profile: 15.7 mm in height
- Clearance and creepage distance
  Between coil and contacts: 8 mm/8 mm
  Between contacts of the same polarity: 3 mm/4 mm
- Models with AC coil available.
- High-Inrush model available
  (Inrush peak currents up to 100 A)
- Silent model available
  (Approx. 25% (15 dB) less sound pressure than standard G5RL-series Relay)
- RoHS Compliant

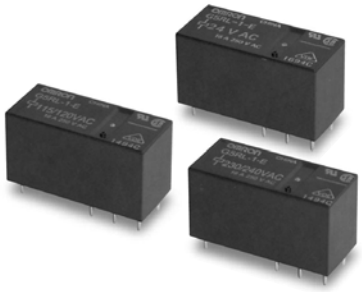

Ordering Information

Classification		Enclosure ratings	Contact form	
Contact ratings	Special function		SPST-NO	SPDT
16 A (high capacity)	AC coil	Flux protection	---	G5RL-1-E
	High inrush		G5RL-1A-E-HR	G5RL-1-E-HR
	Silent		G5RL-1A-E-LN	
12 A			G5RL-1A-LN	

Note: When ordering, add the rated coil voltage to the model number.
Example: G5RL-1A-LN 12 VDC

Rated coil voltage

Model Number Legend

G5RL – □ □ – □ – □ □ VDC (VAC)
1 2 3 4 5

1. **Number of Poles**
   1: 1 pole
2. **Contact Form / Contact Construction**
   None: SPDT
   A: SPST-NO
3. **Classification**
   None: 12 A
   E: 16 A (high capacity)
4. **Special Function**
   None: Standard
   HR: High inrush
   LN: Silent
5. **Rated Coil Voltage**
   Refer to “Coil Ratings” on page 2, 4 and 6.

Specifications

Models with AC Coil

■ Coil Ratings

Rated voltage	24 VAC	100 VAC	115 VAC / 120 VAC		200 VAC	230 VAC / 240 VAC	
Rated current 50Hz (mA)	31.30 mA	7.50 mA	5.85 mA	6.25 mA	3.75 mA	3.00 mA	3.13 mA
Rated current 60Hz (mA)	28.30 mA	6.88 mA	5.35 mA	5.70 mA	3.45 mA	2.76 mA	2.88 mA
Coil resistance	443Ω	8,220Ω	11,600Ω		33,000Ω	47,600Ω	
Must operate voltage	75% max. of rated voltage						
Must release voltage	15% min. of rated voltage						
Max. voltage	90% to 110% of rated voltage						
Power consumption	Approx. 0.75 VA						

Note: 1. The above items are measured at a coil temperature of 23˚C.
2. The tolerance of rated current is +15% / -20%.
3. Power consumption drop was measured at 50Hz.
4. Coil resistance is provided as reference values.

■ Coil Ratings

Contact form	SPDT
Contact material	Ag alloy (Cd free)
Load	Resistive load (cosϕ=1)
Rated load	16 A at 250 VAC (NO) 16 A at 24 VDC (NO) 5 A at 250 VAC (NC) 5 A at 24 VDC (NC)
Rated carry current	16 A (NO), 5 A (NC)
Max. switching voltage	250 VAC, 24 VDC
Max. switching current	16 A (NO), 5 A (NC)
Max. switching power	4,000 VA, 384 W (NO) 1,250 VA, 120 W (NC)
Failure rate (reference value)	40 mA at 24 VDC

Note: P level: $\lambda_{60} = 0.1 \times 10^{-6}$ operations

■ Characteristics

Contact resistance	100 mΩ max.
Operate time	20 ms max.
Release time	20 ms max.
Insulation resistance	1,000 MΩ min. (at 500 VDC)
Dielectric strength	16 A (NO), 5 A (NC)
Max. switching voltage	6,000 VAC, 50/60 Hz for 1 min between coil and contacts 1,000 VAC, 50/60 Hz for 1 min between contacts of same polarity
Impulse withstand voltage	10 kV between coil and contacts (1.2 x 50 μs)
Vibration resistance	Destruction: 10 to 55 to 10 Hz, 1.5-mm double amplitude Malfunction: 10 to 55 to 10 Hz, 1.5-mm double amplitude
Endurance	Mechanical: 10,000,000 operations min. (at 18,000 operations/h) Electrical: 50,000 operations min. (Resistive load, 16 A, 250 VAC, NO contact) (Resistive load, 16 A, 24 VDC, NO contact) (Resistive load, 5 A, 250 VAC, NC contact) (Resistive load, 5 A, 24 VDC, NC contact)
Ambient temperature	Operating: -40°C to 70°C (with no icing)
Ambient humidity	Operating: 5% to 85%
Weight	Approx. 10g

Note: 1. Values in the above table are initial values.
2. The contact resistance is measured with 1 A applied at 5 VDC using a fall-of-potential method.
3. The insulation resistance is measured between coil and contacts and between contacts of the same polarity at 500 VDC.

■ Approved Standards

UL 508 (File No. E41643)/CSA C22.2 (No.14) (File No. LR31928)

Model	Coil ratings	Contact ratings
G5RL-1-E	24 to 240 VAC	16 A, 277 VAC General, 50,000 operations - NO 16 A, 250 VAC General, 50,000 operations - NO TV-5, 25,000 operations - NO A300 Pilot Duty, 720 VA, 240 VAC, 30,000 operations - NO 1/2 Hp, 120 VAC, 6,000 operations - NO 60 LRA/10 FLA, 250 VAC, 6,000 operations - NO 5 A, 250 VAC General, 50,000 operations - NC 5 A, 24 VDC Resistive, 50,000 operations - NC

VDE (EN61810-1) (License No. A282)

Model	Coil ratings	Contact ratings
G5RL-1-E	24, 100, 115/120, 200, 230/240 VAC (50 Hz)	16 A, 250 VAC 15,000 operations - NO

Dimensions

Note: All units are in millimetres unless otherwise indicated.

G5RL-1-E





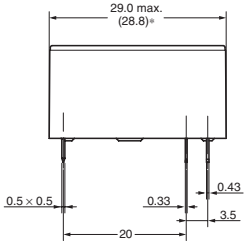

* Indicates average dimensions.

Mounting Holes (Bottom View)

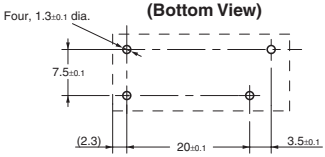

Terminal Arrangement/ Internal Connections (Bottom View)



Specifications

High-inrush Models

■ Coil Ratings

Rated voltage	5 VDC	12 VDC	24 VDC	48 VDC
Rated current	80.0 mA	33.3 mA	16.7 mA	8.96 mA
Coil resistance	62.5 Ω	360 Ω	1,440 Ω	5,358 Ω
Must operate voltage	70% of rated voltage			
Must release voltage	10% of rated voltage			
Max. voltage	130% of rated voltage			
Power consumption	Approx. 400 mW			Approx. 430 mW

Note: 1. The above items are measured at a coil temperature of 23°C.
2. The tolerance of the rated current is +10%.

■ Contact Ratings

Contact form	SPST-NO	SPDT
Contact material	Ag alloy (Cd free)	
Load	Resistive load (cosϕ=1)	
Rated load	16 A at 250 VAC 16 A at 24 VDC	16 A at 250 VAC (NO) 16 A at 24 VDC (NO) 5 A at 250 VAC (NC) 5 A at 24 VDC (NC)
Rated carry current	16 A	16 A (NO), 5 A (NC)
Max. switching voltage	250 VAC, 24 VDC	
Max. switching current	16 A	16 A (NO), 5 A (NC)
Max. switching power	4,000 VA, 384 W (NO)	4,000 VA, 384 W (NO), 1,250 VA, 120 W (NC)
Failure rate (reference value)	100 mA at 50 VDC	

Note: P level: λ_{60} = 0.1 x 10^{-6} operations

■ Characteristics

Contact resistance	100 mΩ max.
Operate time	15 ms max.
Release time	5 ms max.
Insulation resistance	1,000 MΩ min. (at 500 VDC)
Dielectric strength	16 A (NO), 5 A (NC)
Max. switching voltage	6,000 VAC, 50/60 Hz for 1 min between coil and contacts 1,000 VAC, 50/60 Hz for 1 min between contacts of same polarity
Impulse withstand voltage	10 kV between coil and contacts (1.2 x 50 μs)
Vibration resistance	Destruction: 10 to 55 to 10 Hz, 1.5-mm double amplitude Malfunction: 10 to 55 to 10 Hz, 1.5-mm double amplitude
Endurance	Mechanical: 10,000,000 operations min. (at 18,000 operations/h) Electrical: 50,000 operations min. (Resistive load, 16 A, 250 VAC, NO contact) (Resistive load, 16 A, 24 VDC, NO contact) (Resistive load, 5 A, 250 VAC, NC contact) (Resistive load, 5 A, 24 VDC, NC contact)
Ambient temperature	Operating: -40°C to 85°C (with no icing)
Ambient humidity	Operating: 5% to 85%
Weight	Approx. 10g

Note: 1. Values in the above table are initial values.
2. The contact resistance is measured with 1 A applied at 5 VDC using a fall-of-potential method.
3. The insulation resistance is measured between coil and contacts and between contacts of the same polarity at 500 VDC.

■ Approved Standards

UL 508 (File No. E41643)/CSA C22.2 (No.14) (File No. LR31928)

Model	Coil ratings	Contact ratings
G5RL-1(A)-E-HR	5 to 48 VAC	16 A, 277 VAC General, 50,000 operations - NO 16 A, 250 VAC General, 50,000 operations - NO TV-5, 25,000 operations - NO A300 Pilot Duty, 720 VA, 240 VAC, 30,000 operations - NO 1/2 Hp, 120 VAC, 6,000 operations - NO 60 LRA/10 FLA, 250 VAC, 6,000 operations - NO 5 A, 250 VAC General, 50,000 operations - NC 5 A, 24 VDC Resistive, 50,000 operations - NC

VDE (EN61810-1) (License No. A282)

Model	Coil ratings	Contact ratings
G5RL-1(A)-E-HR	5, 12, 24, 48 VDC	16 A at 250 VAC cosϕ=1 15,000 operations - NO 240 VAC 100 A (0-P) Steady 10 A (rms) 50,000 operations - NO 240 VAC 50 A (0-P) Steady 5 A (rms) 10,000 operations - NO

Dimensions

Note: All units are in millimetres unless otherwise indicated.

G5RL-1A-E-HR

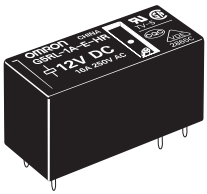

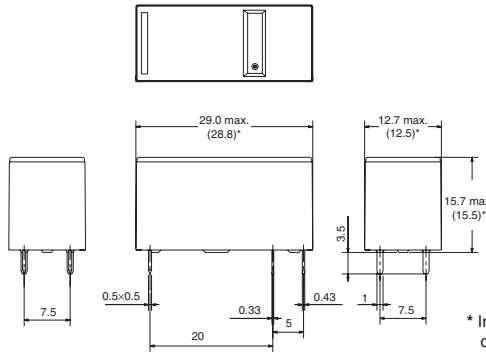

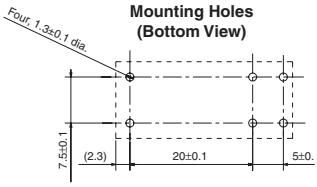

Mounting Holes (Bottom View)

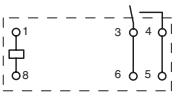

Terminal Arrangement/ Internal Connections (Bottom View)

* Indicates average dimensions.

G5RL-1-E-HR

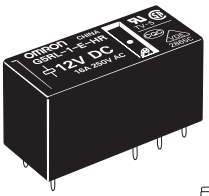

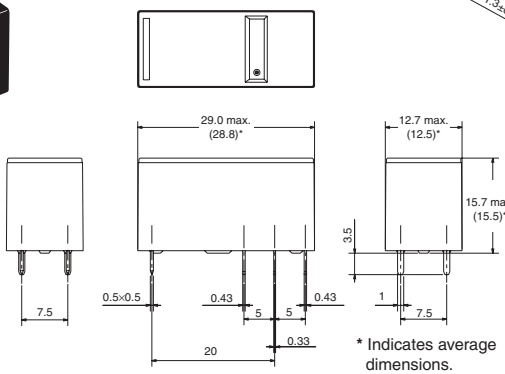

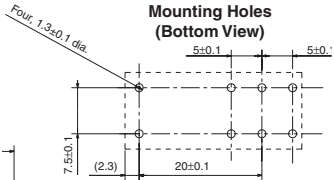

Mounting Holes (Bottom View)

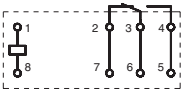

Terminal Arrangement/ Internal Connections (Bottom View)

* Indicates average dimensions.

Specifications

Silent Models

■ Coil Ratings

Rated voltage	5 VDC	12 VDC	24 VDC
Rated current	106.0 mA	44.2 mA	22.1 mA
Coil resistance	47.2 Ω	272 Ω	1,086 Ω
Must operate voltage	70% of rated voltage		
Must release voltage	10% of rated voltage		
Max. voltage	110% of rated voltage		
Power consumption	Approx. 530 mW		

Note: 1. The above items are measured at a coil temperature of 23°C.
2. The tolerance of the rated current is +10%.

■ Coil Ratings

Contact form	SPST-NO	SPDT
Contact material	Ag alloy (Cd free)	
Load	Resistive load (cosϕ=1)	
Rated load	12 A at 250 VAC 12 A at 24 VDC	16 A at 250 VAC 16 A at 24 VDC
Rated carry current	12 A	16 A
Max. switching voltage	250 VAC, 24 VDC	
Max. switching current	12 A	16 A
Max. switching power	3,000 VA, 288 W	4,000 VA, 384 W
Failure rate (reference value)	100 mA at 5 VDC	

Note: P level: λ_{60} = 0.1 x 10^{-6} operations

■ Characteristics

Item	Standard	High capacity
Contact resistance	100 mΩ max.	
Operate time	15 ms max.	
Release time	15 ms max.	
Insulation resistance	1,000 MΩ min. (at 500 VDC)	
Dielectric strength	6,000 VAC, 50/60 Hz for 1 min between coil and contacts 1,000 VAC, 50/60 Hz for 1 min between contacts of same polarity	
Impulse withstand voltage	10 kV between coil and contacts (1.2 x 50 μs)	
Vibration resistance	Destruction: 10 to 55 to 10 Hz, 1.5-mm double amplitude Malfunction: 10 to 55 to 10 Hz, 1.5-mm double amplitude	
Endurance	Mechanical: 1,000,000 operations min. (at 18,000 operations/h) Electrical: 1,00,000 operations (Resistive load, 12 A, 250 VAC) (Resistive load, 12 A, 24 VDC)	Mechanical: 1,000,000 operations min. (at 18,000 operations/h) Electrical: 50,000 operations (Resistive load, 16 A, 250 VAC) (Resistive load, 16 A, 24 VDC)
Ambient temperature	Operating: -40°C to 85°C (with no icing)	
Ambient humidity	Operating: 5% to 85%	
Weight	Approx. 10g	

Note: 1. Values in the above table are initial values.
2. The contact resistance is measured with 1 A applied at 5 VDC using a fall-of-potential method.
3. The insulation resistance is measured between coil and contacts and between contacts of the same polarity at 500 VDC.
4. The release time is value with a diode attached.

■ Approved Standards

UL 508 (File No. E41643)/CSA C22.2 (No.14) (File No. LR31928)

Model	Coil ratings	Contact ratings
G5RL-1A-LN	5 to 24 VAC	12 A, 250 VAC Resistive, 100,000 operations 12 A, 24 VDC Resistive, 100,000 operations TV-8, 25,000 operations
G5RL-1A-E-LN		16 A, 250 VAC Resistive, 50,000 operations 16 A, 24 VDC Resistive, 50,000 operations TV-8, 25,000 operations

VDE (EN61810-1), EN60065) (Licence No. A282)

Model	Coil ratings	Contact ratings
G5RL-1A-LN	5, 12, 24VDC	12A, 250VAC cosϕ= 1 (60,000 operations) 12A, 24VDC (0ms) (100,000 operations) 230VAC, 70A (0-P) Steady 1A (ms) (20,000 operations) 250VAC, 100A (0-P) Steady 3A (ms) (10,000 operations) 250VAC, 40A (0-P) Steady 5A (ms) (10,000 operations)
G5RL-1A-E-LN		16A, 250VAC cosϕ= 1 (30,000 operations) 16A, 24VDC (0ms) (40,000 operations) 230VAC, 70A (0-P) Steady 1A (ms) (20,000 operations) 250VAC, 100A (0-P) Steady 3A (ms) (10,000 operations) 250VAC, 40A (0-P) Steady 5A (ms) (10,000 operations)

Engineering Data

Distribution of Sound Pressure

When Operating

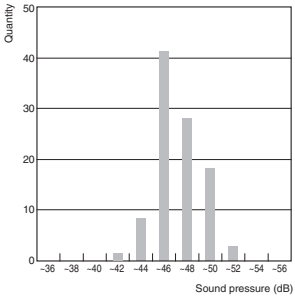

When Releasing

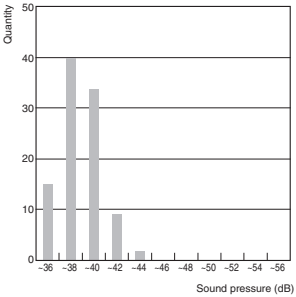

Measuring Conditions

Sample: G5RL-1A-LN (N=100)

Measuring range:
A characteristics, Fast, Max. hold

Coil voltage: 12 VDC

Coil connected parts: Diode

Background noise: Approx. 30 dB

Measuring environment:
At normal temperature and humidity

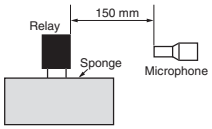

Dimensions

Note: All units are in millimetres unless otherwise indicated.

G5RL-1A-LN

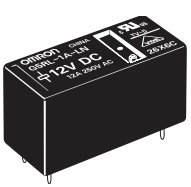

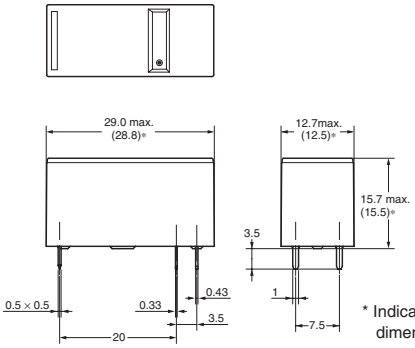

* Indicates average dimensions.

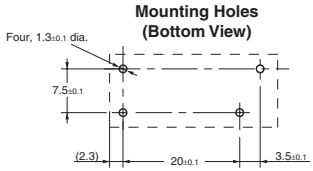

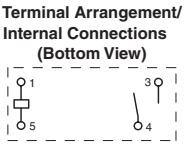

G5RL-1A-E-LN

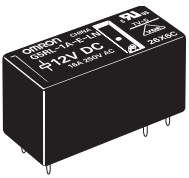

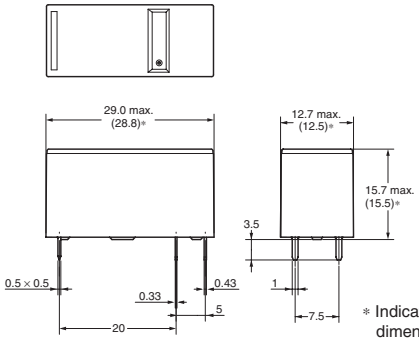

* Indicates average dimensions.

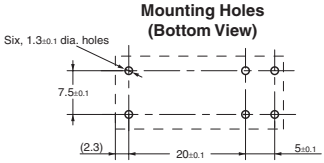

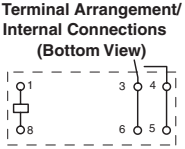

Precautions

■ Mounting

When mounting a G5RL-LN Relay (Silent Relay) on a PCB, use a diode for surge absorption for the coil.

Disclaimer:
All technical performance data applies to the product as such; specific conditions of individual applications are not considered. Always check the suitability of the product for your intended purpose. OMRON does not assume any responsibility or liability for noncompliance herein, and we recommend prior technical clarification for applications where requirements, loading, or ambient conditions differ from

ALL DIMENSIONS SHOWN ARE IN MILLIMETRES.
To convert millimetres into inches, multiply by 0.03937. To convert grams into ounces, multiply by 0.03527.

CAT. No. K132-E2-01-X