efector400

# RV3500

INCREMENTAL ENCODER BASIC LINE

**Encoders**

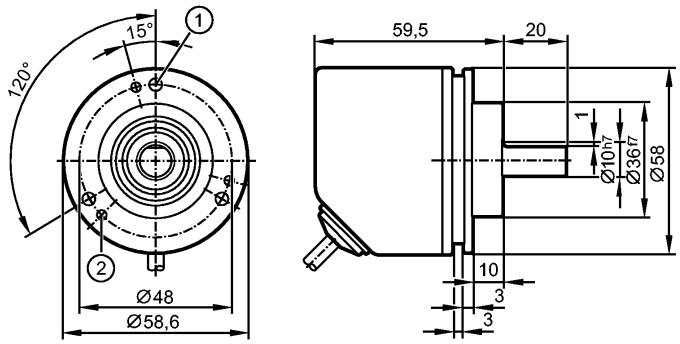


1: M4 x 0.7 6 mm deep
2: M3 x 0.5 6 mm deep

CE IO-Link

| Product characteristics |
|---|
| Solid shaft encoder |
| HTL, TTL 50 mA |
| Cable |
| Clamping flange |
| Magnetic detection system |
| Resolution 1...9999 |

| Electrical data | | |
|---|---|---|
| Operating voltage | [V] | 4.5...30 DC |
| Current consumption | [mA] | < 150 |
| Max. permissible rpm / elec. | [1/min] | 12000 |
| Phase difference A und B | [°] | 90 |
| Switching frequency | [kHz] | 1000 |
| Reverse polarity protection | | yes |
| Short-circuit protection | | yes |
| Protection class | | III |
| Pulse diagram | | 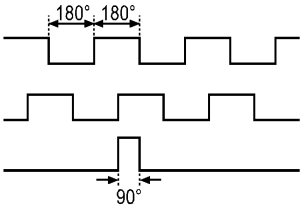 |



Direction of rotation clockwise (looking at the shaft)

| Outputs | |
|---|---|
| Output function | HTL, TTL 50 mA |

| Measuring / setting range | |
|---|---|
| Encoders | |
| Resolution | programmable, factory setting 1024 |

| Accuracy / deviations | |
|---|---|
| Accuracy | < 0.1° |

| Reaction times |
|---|

# RV3500

INCREMENTAL ENCODER BASIC LINE

| | | |
|---|---|---|
| Power-on delay time | [s] | 0.5 |
| **Software / programming** | | |
| Programming options | | Resolution, rotational direction, HTL, TTL |
| **Interfaces** | | |
| IO-Link Device | | |
| Transfer type | | COM 2 |
| IO-Link revision | | V1.1 |
| SIO mode | | yes |
| Min. process cycle time | [ms] | 2.3 |
| **Mechanical data** | | |
| Max. permissible rpm / mech. | [1/min] | 12000 |
| Starting torque | [Ncm] | < 1 (20 °C) |
| Max. shaft load (at the shaft end) | [N] | axial 40; radial 60 |
| Shaft, material | [mm] | Ø 10, stainless steel |
| Vibration resistance | | 30 g |
| Shock resistance | | 200 g |
| Housing materials | | flange: aluminium; housing: stainless steel 444/1.4521; cable plug: polyamide |
| Weight | [kg] | 0.436 |
| **Environment** | | |
| Max. relative air humidity | [%] | 95, Condensation not permissible |
| Ambient temperature | [°C] | -40...80, -25 °C for flexibly laid cable |
| Storage temperature | [°C] | -40...80 |
| Protection | | IP 65 / IP 66; IP 67 (housing); IP 64 (shaft) |
| **Tests / approvals** | | |
| MTTF | [Years] | 292.2 |
| **Electrical connection** | | |
| Connection | | PUR cable, screened / 2 m; 5 x 0.14 mm²; Ø 4.9 mm; radial, can also be used axially |
| Max. cable length | [m] | 100 |

**Wiring**

Core colours

| | |
|---|---|
| BK | black |
| BN | brown |
| BU | blue |
| GY | grey |
| WH | white |

IO-Link:

| | |
|---|---|
| BN: | L+ |
| WH: | not to be used |
| BU: | L- |
| GY: | not to be used |
| BK: | IO-Link |
| screen: | Housing |

encoder:

| | |
|---|---|
| BN: | UB |
| WH: | A |
| BU: | GND |
| GY: | B |
| BK: | Z/0-Pulse (90 deg) |
| screen: | Housing |

| | | |
|---|---|---|
| **Remarks** | | |
| Pack quantity | [piece] | 1 |