PARTS LIST			
ITEM	QTY	PART NUMBER	DESCRIPTION
1	2	M5605006	Front/Rear Bezel
2	1	M5601035	Base/Chassis Assembly
3	1	M5601071	Top Cover
4	1	M5602014	Rear Panel
5	8	M5700202	Rack Card Guides
6	4	M3 x 8 mm Pan Screw	Rear Panel Screws
7	8	M4 x 10 mm CSK	Bezel Fixing Screws

Base

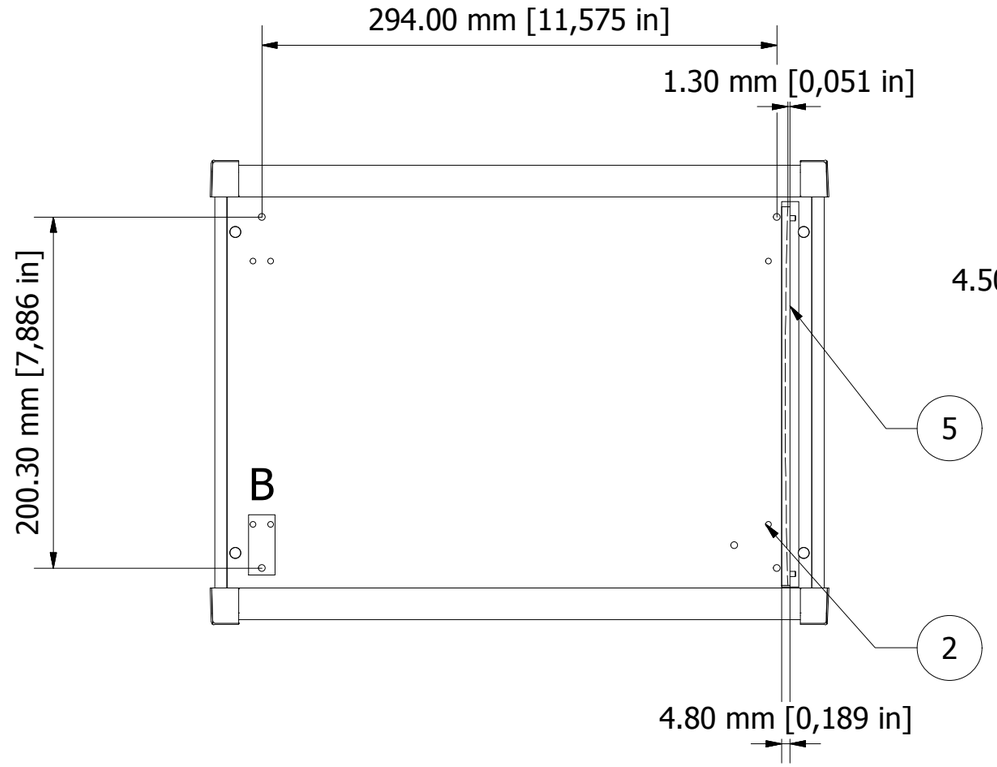

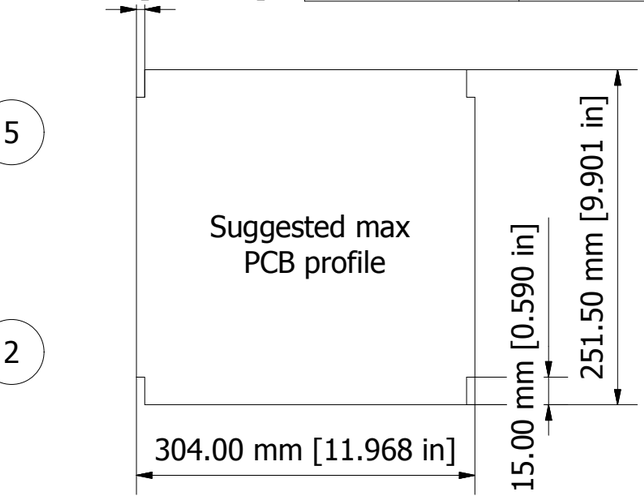

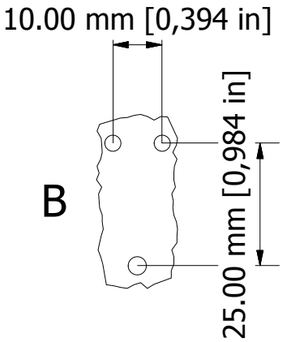

Foot hole detail:
2 holes Ø3.3 mm [0.13 in] & 1 hole Ø 3.8 mm [0.15 in]

Front

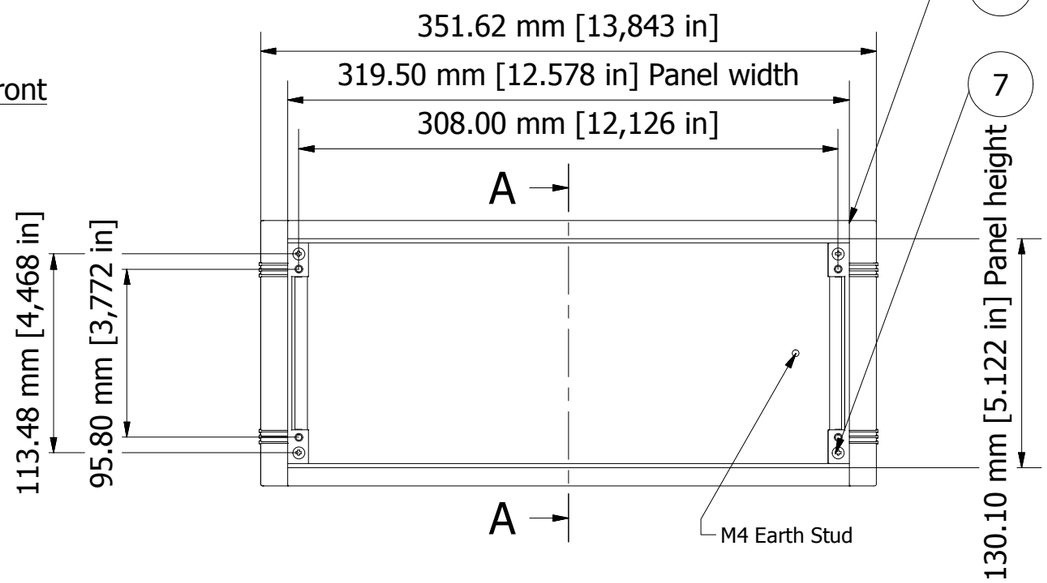

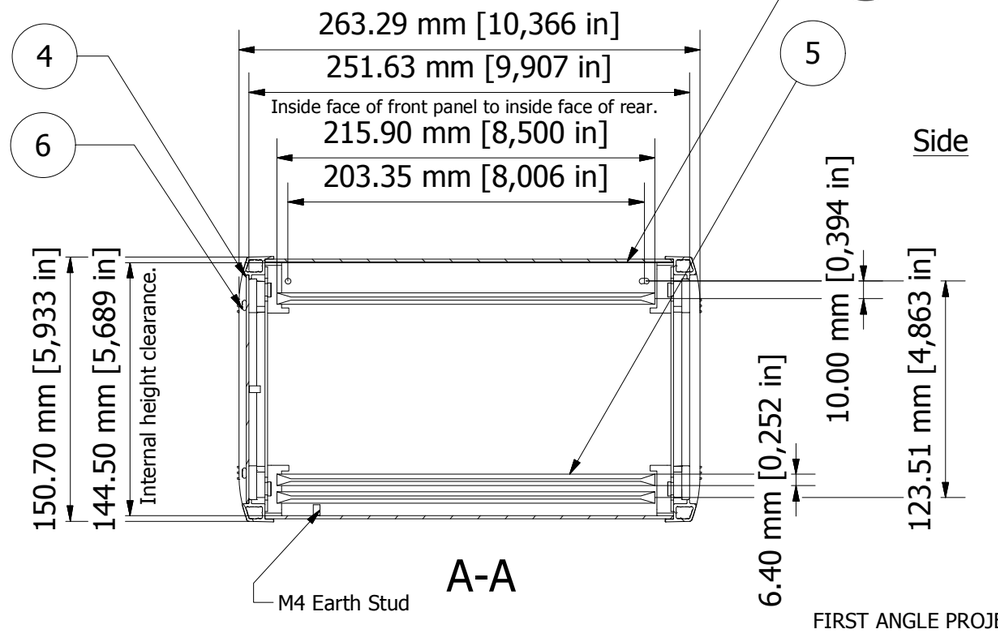

Side

FIRST ANGLE PROJECTION

Notes:
1) Case is fabricated from 1.5 mm aluminium sheet with die cast & extrusion bezels.
2) Case is powder coat painted fine texture with RAL 7040 bezels and RAL 7035 panelwork.
3) Cover, base and rear panel all have M4 x 8 mm studs for earthing points.
4) Case supplied with 4 off plastic card guides - M5700203.

© OKW Enclosures Ltd (Date as shown). This drawing contains proprietary information of OKW Enclosures Ltd and is tendered subject to the following conditions. The information be retained in confidence, not be reproduced or copied, and not be used or incorporated in any product, unless permission is obtained in writing from OKW Enclosures Ltd.

Designed by	Description	Date	Scale
L Clark	Unimet-Plus 6	25/04/2012	1:3.5

METCASE ENCLOSURES
15 Brunel Way, Segensworth East, Fareham, Hampshire, UK. PO15 5TX
Tel: +44 (0)1489 583858 Email: metcase@okw.co.uk

METCASE www.metcase.com

Part Number	Issue	Sheet
M5635315	1	1 / 1