E30425

Teach button for pressure sensors

TEACH BUTTON

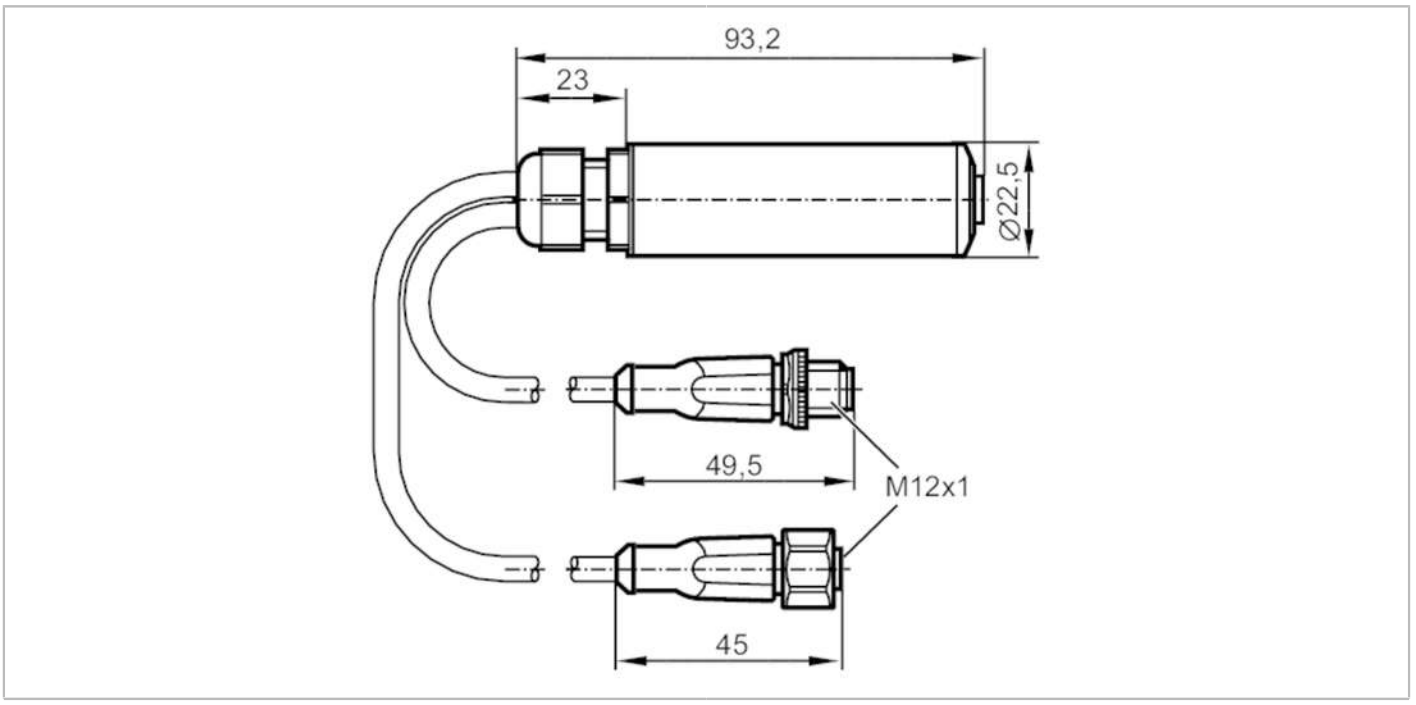

Application		
Design		for sensors PM1xxx
Electrical data		
Operating voltage	[V]	20...30 DC
Outputs		
Max. load	[Ω]	(Ub - 14 V) / 21.5 mA
Operating conditions		
Ambient temperature	[°C]	-25...60
Protection		IP 65
Tests / approvals		
MTTF	[years]	2927
Mechanical data		
Weight	[g]	227
Materials		stainless steel (1.4404 / 316L); PA; FFKM; PBT
Remarks		
Remarks		If a teach button is connected, no IO-Link communication is possible.
Pack quantity		1 pcs.

E30425

Teach button for pressure sensors

TEACH BUTTON

Electrical connection

Cable: 0.9 m, PUR; Maximum cable length: 30 m; between sensor and teach button

Connection

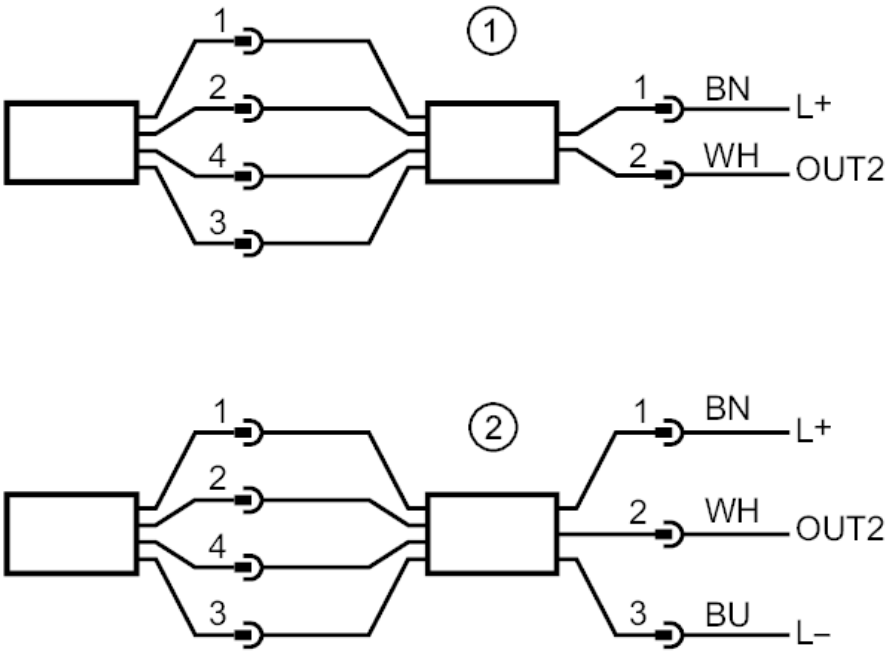

1	2-wire operation
2	3-wire operation
OUT2	4...20 mA
	colours to DIN EN 60947-5-2