DATASHEET - M22-XZK-GB99



Label, emergency switching off, yellow, HxW=50x33mm, emergency-Stop

Part no.	**M22-XZK-GB99**
Catalog No.	**216472**
Alternate Catalog No.	**M22-XZK-GB99Q**
EL-Nummer (Norway)	**4355429**

Similar to illustration

Delivery program

Product range			Accessories
Basic function accessories			Emergency-stop labels
Form			33 x 50 mm
Inscription			EMERGENCY STOP
Language			en
Colour			
			yellow
RAL Value			RAL 1004
Degree of Protection			IP66
Connection to SmartWire-DT			no
Notes			
Lettering black			

Technical data

General

Degree of Protection			IP66
Ambient temperature			
Open		°C	-25 - +70
shipping classification			DNV GL LR

Design verification as per IEC/EN 61439

Technical data for design verification			
Rated operational current for specified heat dissipation	I_n	A	0
Heat dissipation per pole, current-dependent	P_{vid}	W	0
Equipment heat dissipation, current-dependent	P_{vid}	W	0
Static heat dissipation, non-current-dependent	P_{vs}	W	0
Heat dissipation capacity	P_{diss}	W	0
Operating ambient temperature min.		°C	-25
Operating ambient temperature max.		°C	70

IEC/EN 61439 design verification			
10.2 Strength of materials and parts			
10.2.2 Corrosion resistance			Meets the product standard's requirements.
10.2.3.1 Verification of thermal stability of enclosures			Meets the product standard's requirements.
10.2.3.2 Verification of resistance of insulating materials to normal heat			Meets the product standard's requirements.
10.2.3.3 Verification of resistance of insulating materials to abnormal heat and fire due to internal electric effects			Meets the product standard's requirements.
10.2.4 Resistance to ultra-violet (UV) radiation			Please enquire
10.2.5 Lifting			Does not apply, since the entire switchgear needs to be evaluated.
10.2.6 Mechanical impact			Does not apply, since the entire switchgear needs to be evaluated.
10.2.7 Inscriptions			Meets the product standard's requirements.
10.3 Degree of protection of ASSEMBLIES			Does not apply, since the entire switchgear needs to be evaluated.
10.4 Clearances and creepage distances			Meets the product standard's requirements.
10.5 Protection against electric shock			Does not apply, since the entire switchgear needs to be evaluated.
10.6 Incorporation of switching devices and components			Does not apply, since the entire switchgear needs to be evaluated.
10.7 Internal electrical circuits and connections			Is the panel builder's responsibility.
10.8 Connections for external conductors			Is the panel builder's responsibility.
10.9 Insulation properties			
10.9.2 Power-frequency electric strength			Is the panel builder's responsibility.
10.9.3 Impulse withstand voltage			Is the panel builder's responsibility.
10.9.4 Testing of enclosures made of insulating material			Is the panel builder's responsibility.
10.10 Temperature rise			Not applicable.
10.11 Short-circuit rating			Is the panel builder's responsibility. The specifications for the switchgear must be observed.
10.12 Electromagnetic compatibility			Is the panel builder's responsibility. The specifications for the switchgear must be observed.
10.13 Mechanical function			The device meets the requirements, provided the information in the instruction leaflet (IL) is observed.

Technical data ETIM 7.0

Low-voltage industrial components (EG000017) / Text plate for control circuit devices (EC000624)			
Electric engineering, automation, process control engineering / Low-voltage switch technology / Command and alarm device / Identification plate for command devices (ecl@ss10.0.1-27-37-12-25 [AKF043014])			
Imprint			EMERGENCY STOP
Imprint ISO symbols			Other
Colour			Yellow
Shape			Rectangular
Width		mm	33
Height		mm	50
Outer diameter		mm	0

Approvals

North America Certification			UL/CSA certification not required

Dimensions

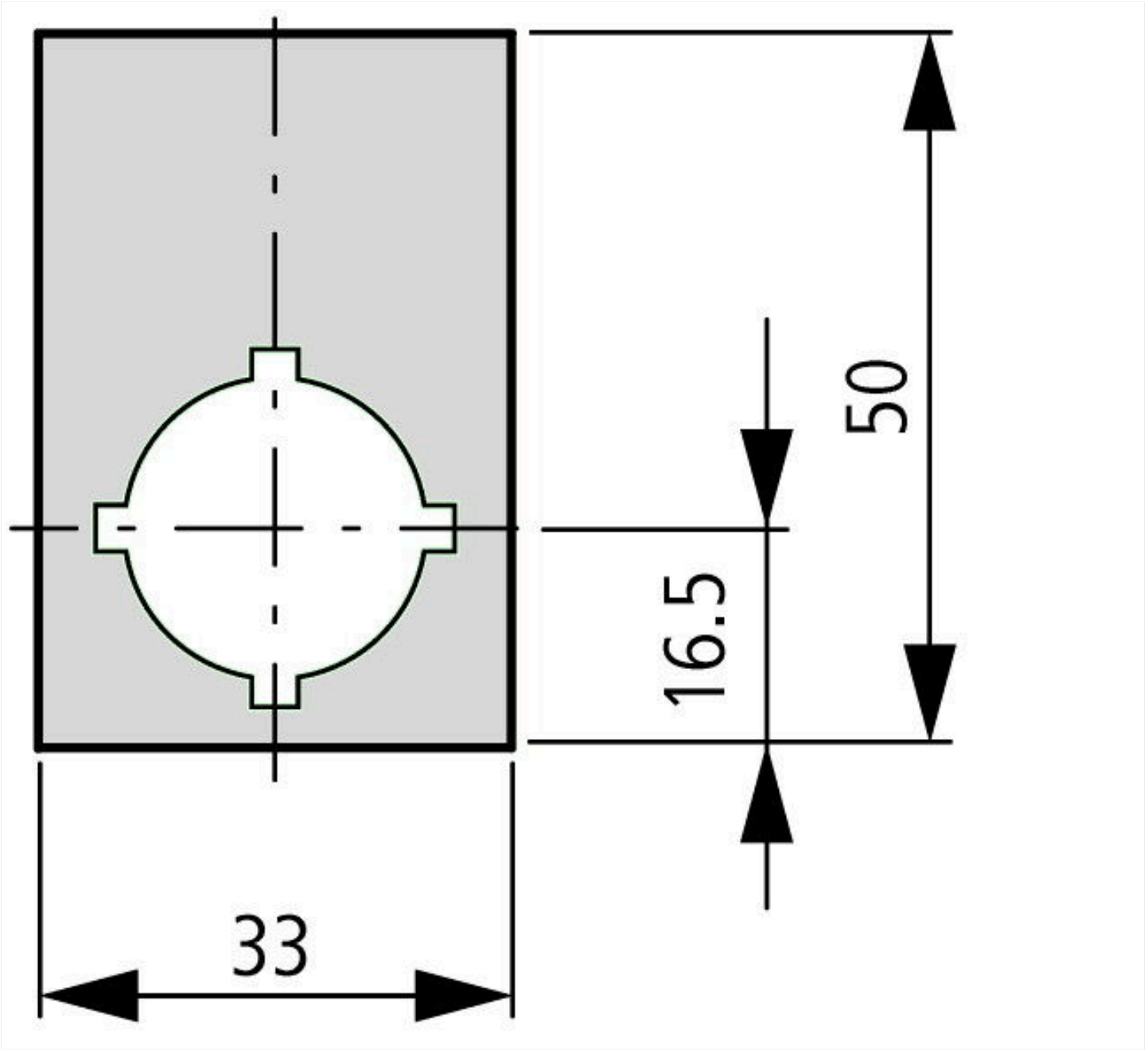

© 10/2020 by Eaton Industries GmbH