DELTA ELECTRONICS, INC.

VFD-EL

User Manual

Multiple Functions / Micro Type AC Motor Drives



Power Range:

1-phase 115V series: 200W~750W	(0.25~1HP)
1-phase 230V series: 200W~2.2kW	(0.25~3HP)
3-phase 230V series: 200W~3.7kW	(0.25~5HP)
3-phase 460V series: 400W~3.7kW	(0.50~5HP)



DELTA ELECTRONICS, INC.

www.delta.com.tw/industrialautomation

ASIA

Delta Electronics, Inc.
Taoyuan1
31-1, Xingbang Road, Guishan Industrial Zone,
Taoyuan County 33370, Taiwan, R.O.C.
TEL: 886-3-362-6301 / FAX: 886-3-362-7267

Delta Electronics (Jiang Su) Ltd.
Wujiang Plant3
1688 Jiangxing East Road,
Wujiang Economy Development Zone,
Wujiang City, Jiang Su Province,
People's Republic of China (Post code: 215200)
TEL: 86-512-6340-3008 / FAX: 86-512-6340-7290

Delta Electronics (Japan), Inc.
Tokyo Office
Delta Shibadaimon Building, 2-1-14 Shibadaimon,
Minato-Ku, Tokyo, 105-0012, Japan
TEL: 81-3-5733-1111 / FAX: 81-3-5733-1211

Delta Electronics (Korea), Inc.
234-9, Duck Soo BD 7F, Nonhyun-dong,
Kangnam-ku, Seoul, Korea
Post code : 135-010
TEL: 82-2-515-5303/5 / FAX: 82-2-515-5302

Delta Electronics (Singapore) Pte. Ltd.
8 Kaki Bukit Road 2, #04-18 Ruby Warehouse Complex,
Singapore 417841
TEL: 65-6747-5155 / FAX: 65-6744-9228

Delta Energy Systems (India) Pvt. Ltd.
Plot No. 27 & 31, Sector-34, EHTP,
Gurgaon-122001 Haryana, India
TEL: 91-124-4169040 / FAX: 91-124-4036045

AMERICA

Delta Products Corporation (USA)
Raleigh Office
P.O. Box 12173,5101 Davis Drive,
Research Triangle Park, NC 27709, U.S.A.
TEL: 1-919-767-3813 / FAX: 1-919-767-3969

EUROPE

Deltronics (Netherlands) B.V.
Eindhoven Office
De Witbogt 15, 5652 AG Eindhoven, The Netherlands
TEL: 31-40-259-28-50/ FAX: 31-40-259-28-51

5011662902
200808-15



2ELE

*We reserve the right to change the information in this manual without prior notice

sales@deltaacdrives.com
deltaacdrives.com
Call 1(800)985-6929 for Sales

sales@deltaacdrives.com
deltaacdrives.com
Call 1(800)985-6929 for Sales

Preface

Thank you for choosing DELTA's multifunction VFD-EL Series. The VFD-EL Series is manufactured with high-quality components and materials and incorporate the latest microprocessor technology available.

This manual is to be used for the installation, parameter setting, troubleshooting, and daily maintenance of the AC motor drive. To guarantee safe operation of the equipment, read the following safety guidelines before connecting power to the AC motor drive. Keep this operating manual at hand and distribute to all users for reference.

To ensure the safety of operators and equipment, only qualified personnel familiar with AC motor drive are to do installation, start-up and maintenance. Always read this manual thoroughly before using VFD-EL series AC Motor Drive, especially the WARNING, DANGER and CAUTION notes. Failure to comply may result in personal injury and equipment damage. If you have any questions, please contact your dealer.

PLEASE READ PRIOR TO INSTALLATION FOR SAFETY.



DANGER!

1. AC input power must be disconnected before any wiring to the AC motor drive is made.
2. A charge may still remain in the DC-link capacitors with hazardous voltages, even if the power has been turned off. To prevent personal injury, please ensure that power has turned off before opening the AC motor drive and wait ten minutes for the capacitors to discharge to safe voltage levels.
3. Never reassemble internal components or wiring.
4. The AC motor drive may be destroyed beyond repair if incorrect cables are connected to the input/output terminals. Never connect the AC motor drive output terminals U/T1, V/T2, and W/T3 directly to the AC mains circuit power supply.
5. Ground the VFD-EL using the ground terminal. The grounding method must comply with the laws of the country where the AC motor drive is to be installed. Refer to the Basic Wiring Diagram.
6. VFD-EL series is used only to control variable speed of 3-phase induction motors, NOT for 1-phase motors or other purpose.
7. VFD-EL series shall NOT be used for life support equipment or any life safety situation.

WARNING!

1. DO NOT use Hi-pot test for internal components. The semi-conductor used in AC motor drive easily damage by high-voltage.
2. There are highly sensitive MOS components on the printed circuit boards. These components are especially sensitive to static electricity. To prevent damage to these components, do not touch these components or the circuit boards with metal objects or your bare hands.
3. Only qualified persons are allowed to install, wire and maintain AC motor drives.

CAUTION!

1. DO NOT install the AC motor drive in a place subjected to high temperature, direct sunlight, high humidity, excessive vibration, corrosive gases or liquids, or airborne dust or metallic particles.
2. Some parameters settings can cause the motor to run immediately after applying power
3. Only use AC motor drives within specification. Failure to comply may result in fire, explosion or electric shock.
4. To prevent personal injury, please keep children and unqualified people away from the equipment.
5. When the motor cable between AC motor drive and motor is too long, the layer insulation of the motor may be damaged. Please use a frequency inverter duty motor or add an AC output reactor to prevent damage to the motor. Refer to appendix B Reactor for details.
6. The rated voltage for AC motor drive must be ≤ 240V (≤ 480V for 460V models) and the mains supply current capacity must be ≤ 5000A RMS.

Table of Contents

Preface ..... **i**

Table of Contents ..... **iii**

Chapter 1 Introduction **1-1**

1.1 Receiving and Inspection 1-2

1.1.1 Nameplate Information 1-2

1.1.2 Model Explanation 1-2

1.1.3 Series Number Explanation 1-3

1.1.4 Drive Frames and Appearances 1-3

1.1.5 Remove Instructions 1-5

1.2 Preparation for Installation and Wiring 1-5

1.2.1 Ambient Conditions 1-6

1.2.2 DC-bus Sharing: Connecting the DC-bus of the AC Motor Drives in Parallel 1-8

1.3 Dimensions 1-9

Chapter 2 Installation and Wiring **2-1**

2.1 Wiring 2-2

2.2 External Wiring 2-8

2.3 Main Circuit 2-9

2.3.1 Main Circuit Connection 2-9

2.3.2 Main Circuit Terminals 2-11

2.4 Control Terminals 2-12

Chapter 3 Keypad and Start Up 3-1

3.1 Description of the Digital Keypad 3-1

3.2 How to Operate the Digital Keypad 3-3

3.3 Reference Table for the 7-segment LED Display of the Digital Keypad 3-4

3.4 Operation Method 3-4

3.5 Trial Run 3-5

Chapter 4 Parameters 4-1

4.1 Summary of Parameter Settings 4-2

4.2 Parameter Settings for Applications 4-21

4.3 Description of Parameter Settings 4-26

Chapter 5 Troubleshooting 5-1

5.1 Over Current (OC) 5-1

5.2 Ground Fault 5-2

5.3 Over Voltage (OV) 5-2

5.4 Low Voltage (Lv) 5-3

5.5 Over Heat (OH1) 5-4

5.6 Overload 5-4

5.7 Keypad Display is Abnormal 5-5

5.8 Phase Loss (PHL) 5-5

5.9 Motor cannot Run 5-6

5.10 Motor Speed cannot be Changed 5-7

5.11 Motor Stalls during Acceleration 5-8

5.12 The Motor does not Run as Expected 5-8

5.13 Electromagnetic/Induction Noise 5-9

5.14 Environmental Condition....5-9
5.15 Affecting Other Machines 5-10
Chapter 6 Fault Code Information and Maintenance....6-1
6.1 Fault Code Information 6-1
6.1.1 Common Problems and Solutions.... 6-1
6.1.2 Reset 6-5
6.2 Maintenance and Inspections 6-5
Appendix A Specifications A-1
Appendix B Accessories B-1
B.1 All Brake Resistors & Brake Units Used in AC Motor Drives.... B-1
B.1.1 Dimensions and Weights for Brake Resistors B-4
B.2 No Fuse Circuit Breaker Chart B-7
B.3 Fuse Specification Chart B-8
B.4 AC Reactor.... B-9
B.4.1 AC Input Reactor Recommended Value....B-9
B.4.2 AC Output Reactor Recommended Value....B-9
B.4.3 Applications B-10
B.5 Zero Phase Reactor (RF220X00A) B-12
B.6 Remote Controller RC-01 .... B-13
B.7 PU06 .... B-14
B.7.1 Description of the Digital Keypad VFD-PU06 ....B-14
B.7.2 Explanation of Display Message....B-14
B.7.3 Operation Flow Chart B-15
B.8 Fieldbus Modules B-16

B.8.1 DeviceNet Communication Module (CME-DN01) B-16
B.8.1.1 Panel Appearance and Dimensions B-16
B.8.1.2 Wiring and Settings B-16
B.8.1.3 Power Supply B-17
B.8.1.4 LEDs Display B-17
B.8.2 LonWorks Communication Module (CME-LW01) B-17
B.8.2.1 Introduction B-17
B.8.2.2 Dimensions B-17
B.8.2.3 Specifications B-18
B.8.2.4 Wiring B-18
B.8.2.5 LED Indications B-18
B.8.3 Profibus Communication Module (CME-PD01) B-19
B.8.3.1 Panel Appearance B-19
B.8.3.2 Dimensions B-20
B.8.3.3 Parameters Settings in VFD-EL B-20
B.8.3.4 Power Supply B-20
B.8.3.5 PROFIBUS Address B-20
B.8.4 CME-COP01 (CANopen) B-21
B.8.4.1 Product Profile B-21
B.8.4.2 Specifications B-21
B.8.4.3 Components B-22
B.8.4.4 LED Indicator Explanation & Troubleshooting B-23
B.9 MKE-EP & DIN Rail B-25
B.9.1 MKE-EP B-25
B.9.2 DIN Rail: MKEL-DRA (Only for frame A) B-26

Appendix C How to Select the Right AC Motor Drive..... C-1

C.1 Capacity Formulas C-2

C.2 General Precaution C-4

C.3 How to Choose a Suitable Motor..... C-5

This page intentionally left blank

Chapter 1 Introduction

The AC motor drive should be kept in the shipping carton or crate before installation. In order to retain the warranty coverage, the AC motor drive should be stored properly when it is not to be used for an extended period of time. Storage conditions are:

CAUTION!

1. Store in a clean and dry location free from direct sunlight or corrosive fumes.
2. Store within an ambient temperature range of -20 °C to +60 °C.
3. Store within a relative humidity range of 0% to 90% and non-condensing environment.
4. Store within an air pressure range of 86 kPA to 106kPA.
5. DO NOT place on the ground directly. It should be stored properly. Moreover, if the surrounding environment is humid, you should put exsiccator in the package.
6. DO NOT store in an area with rapid changes in temperature. It may cause condensation and frost.
7. If the AC motor drive is stored for more than 3 months, the temperature should not be higher than 30 °C. Storage longer than one year is not recommended, it could result in the degradation of the electrolytic capacitors.
8. When the AC motor drive is not used for longer time after installation on building sites or places with humidity and dust, it's best to move the AC motor drive to an environment as stated above.

1.1 Receiving and Inspection

This VFD-EL AC motor drive has gone through rigorous quality control tests at the factory before shipment. After receiving the AC motor drive, please check for the following:

- Check to make sure that the package includes an AC motor drive, the User Manual/Quick Start and CD.
- Inspect the unit to assure it was not damaged during shipment.
- Make sure that the part number indicated on the nameplate corresponds with the part number of your order.

1.1.1 Nameplate Information

Example for 1HP/0.75kW 3-phase 230V AC motor drive

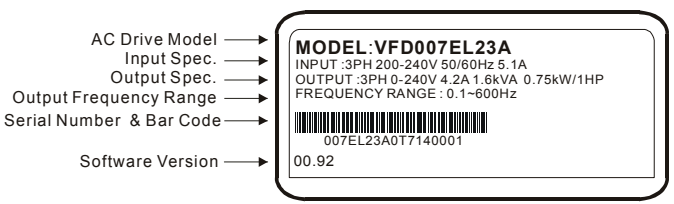

1.1.2 Model Explanation

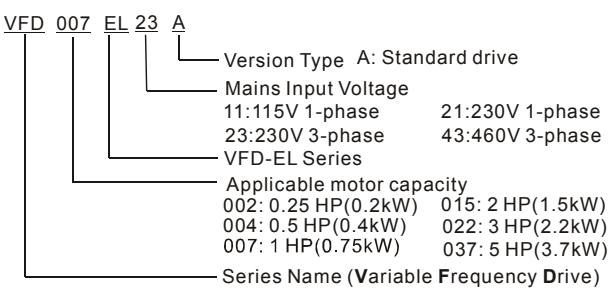

1.1.3 Series Number Explanation

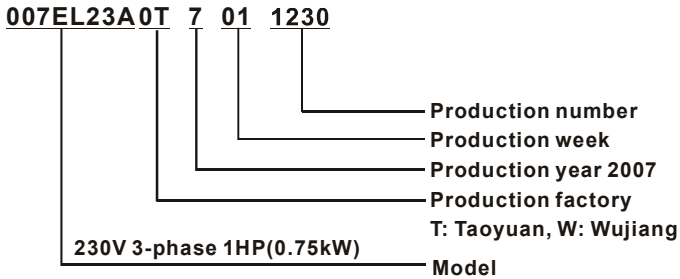

If the nameplate information does not correspond to your purchase order or if there are any problems, please contact your distributor.

1.1.4 Drive Frames and Appearances

0.25-2HP/0.2-1.5kW (Frame A)	1-5HP/0.75-3.7kW (Frame B)
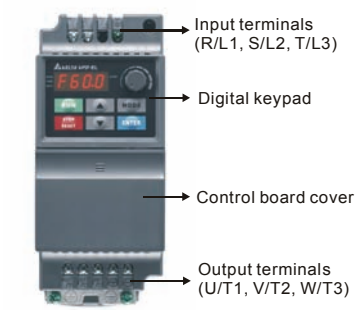	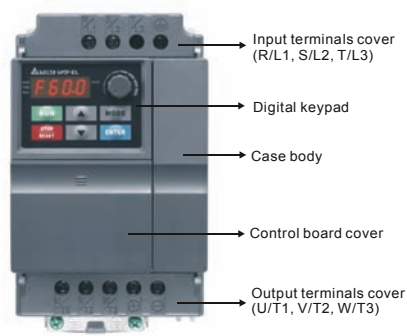

Internal Structure

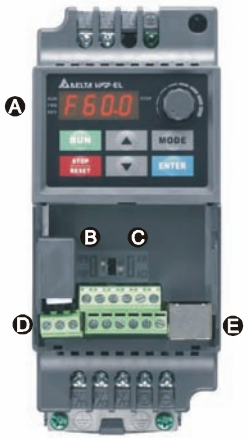

Ⓐ Digital keypad

Ⓑ NPN/PNP

Ⓒ ACI/AVI

Ⓓ External terminals

Ⓔ RS485 port (RJ-45)

RFI Jumper Location

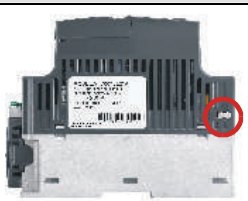

at the right side

NOTE

RFI jumper is near the input terminals as shown in the above figure and can be removed by taking off screws.

Frame	Power range	Models
A	0.25-2hp (0.2-1.5kW)	VFD002EL11A/21A/23A, VFD004EL11A/21A/23A/43A, VFD007EL21A/23A/43A, VFD015EL23A/43A
B	1-5hp (0.75-3.7kW)	VFD007EL11A, VFD015EL21A, VFD022EL21A/23A/43A, VFD037EL23A/43A

RFI Jumper

RFI Jumper: The AC motor drive may emit the electrical noise. The RFI jumper is used to suppress the interference (Radio Frequency Interference) on the power line.

Main power isolated from earth:

If the AC motor drive is supplied from an isolated power (IT power), the RFI jumper must be cut off. Then the RFI capacities (filter capacitors) will be disconnected from ground to prevent circuit damage (according to IEC 61800-3) and reduce earth leakage current.

CAUTION!

1. After applying power to the AC motor drive, do not cut off the RFI jumper. Therefore, please make sure that main power has been switched off before cutting the RFI jumper.
2. The gap discharge may occur when the transient voltage is higher than 1,000V. Besides, electro-magnetic compatibility of the AC motor drives will be lower after cutting the RFI jumper.
3. Do NOT cut the RFI jumper when main power is connected to earth.
4. The RFI jumper cannot be cut when Hi-pot tests are performed. The mains power and motor must be separated if high voltage test is performed and the leakage currents are too high.
5. To prevent drive damage, the RFI jumper connected to ground shall be cut off if the AC motor drive is installed on an ungrounded power system or a high resistance-grounded (over 30 ohms) power system or a corner grounded TN system.

1.1.5 Remove Instructions

Remove Front Cover



Step 1 Step 2

Remove Fan



1.2 Preparation for Installation and Wiring

1.2.1 Ambient Conditions

Install the AC motor drive in an environment with the following conditions:

Operation	Air Temperature:	-10 ~ +50°C (14 ~ 122°F) for UL & cUL -10 ~ +40°C (14 ~ 104°F) for side-by-side mounting
	Relative Humidity:	<90%, no condensation allowed
	Atmosphere pressure:	86 ~ 106 kPa
	Installation Site Altitude:	<1000m
	Vibration:	<20Hz: 9.80 m/s^2 (1G) max 20 ~ 50Hz: 5.88 m/s^2 (0.6G) max
Storage Transportation	Temperature:	-20°C ~ +60°C (-4°F ~ 140°F)
	Relative Humidity:	<90%, no condensation allowed
	Atmosphere pressure:	86 ~ 106 kPa
	Vibration:	<20Hz: 9.80 m/s^2 (1G) max 20 ~ 50Hz: 5.88 m/s^2 (0.6G) max
Pollution Degree	2: good for a factory type environment.	

Minimum Mounting Clearances

Frame A Mounting Clearances

Option 1 (-10 to +50°C)

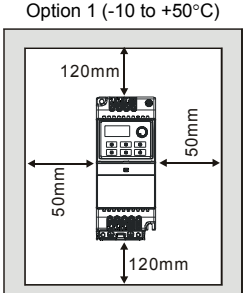

Option 2 (-10 to +40°C)

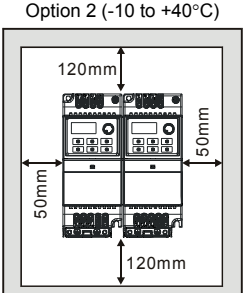

Air flow

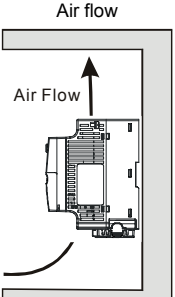

Frame B Mounting Clearances

Option 1 (-10 to +50°C)

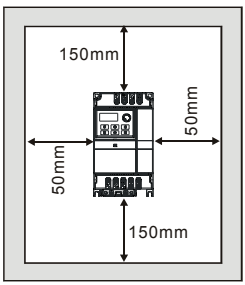

Option 2 (-10 to +40°C)

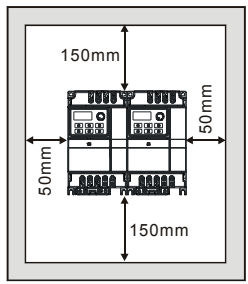

Air flow

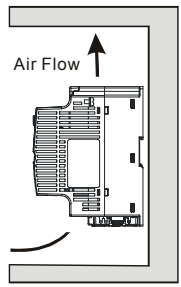

CAUTION!

1. Operating, storing or transporting the AC motor drive outside these conditions may cause damage to the AC motor drive.
2. Failure to observe these precautions may void the warranty!
3. Mount the AC motor drive vertically on a flat vertical surface object by screws. Other directions are not allowed.
4. The AC motor drive will generate heat during operation. Allow sufficient space around the unit for heat dissipation.
5. The heat sink temperature may rise to 90°C when running. The material on which the AC motor drive is mounted must be noncombustible and be able to withstand this high temperature.
6. When AC motor drive is installed in a confined space (e.g. cabinet), the surrounding temperature must be within 10 ~ 40°C with good ventilation. DO NOT install the AC motor drive in a space with bad ventilation.
7. Prevent fiber particles, scraps of paper, saw dust, metal particles, etc. from adhering to the heatsink.
8. When installing multiple AC more drives in the same cabinet, they should be adjacent in a row with enough space in-between. When installing one AC motor drive below another one, use a metal separation between the AC motor drives to prevent mutual heating.

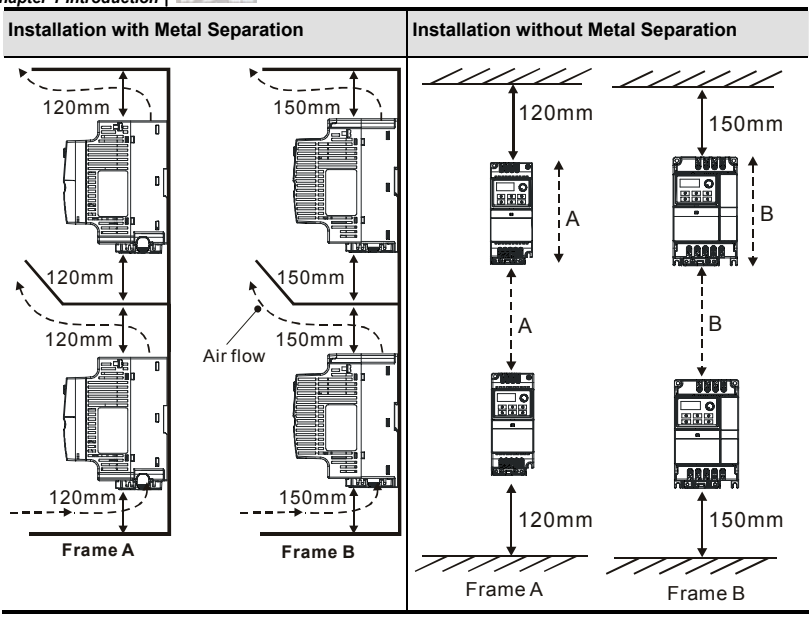

1.2.2 DC-bus Sharing: Connecting the DC-bus of the AC Motor Drives in Parallel

1. **This function is not for 115V models.**
2. The AC motor drives can absorb mutual voltage that generated to DC bus when deceleration.
3. Enhance brake function and stabilize the voltage of the DC bus.
4. The brake module can be added to enhance brake function after connecting in parallel.
5. Only the same power system can be connected in parallel.
6. It is recommended to connect 5 AC motor drives in parallel (no limit in horsepower).

power should be applied at the same time
(only the same power system can be connected in parallel)
Power 208/220/230/380/440/480 (depend on models)

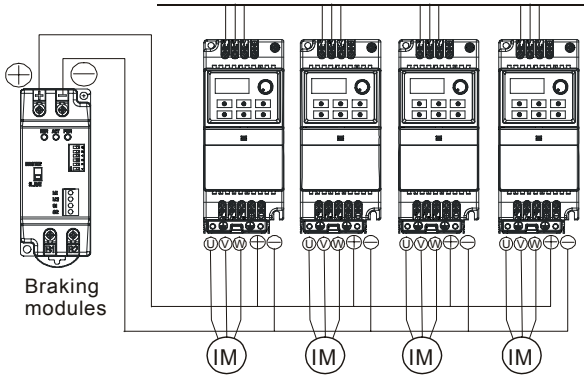

For frame A and B, terminal + (-) is connected to the terminal + (-) of the braking module.

1.3 Dimensions

(Dimensions are in millimeter and [inch])

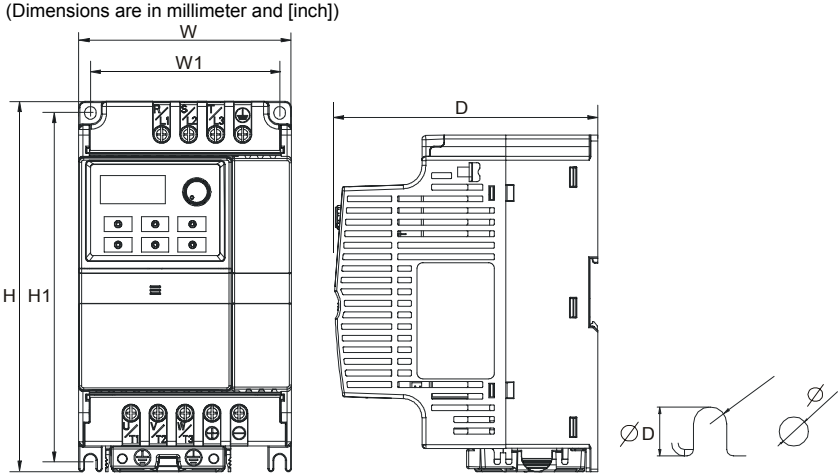

Frame	W	W1	H	H1	D	Ø	ØD
A	72.0[2.83]	59.0[2.32]	174.0[6.86]	151.6[5.97]	136.0[5.36]	5.4[0.21]	2.7[0.11]
B	100.0[3.94]	89.0[3.50]	174.0[6.86]	162.9[6.42]	136.0[5.36]	5.4[0.21]	2.7[0.11]



Frame A: VFD002EL11A/21A/23A, VFD004EL11A/21A/23A/43A, VFD007EL21A/23A/43A, VFD015EL23A/43A

Frame B: VFD007EL11A, VFD015EL21A, VFD022EL21A/23A/43A, VFD037EL23A/43A

Chapter 2 Installation and Wiring

After removing the front cover, check if the power and control terminals are clear. Be sure to observe the following precautions when wiring.

- General Wiring Information

  Applicable Codes

  All VFD-EL series are Underwriters Laboratories, Inc. (UL) and Canadian Underwriters Laboratories (cUL) listed, and therefore comply with the requirements of the National Electrical Code (NEC) and the Canadian Electrical Code (CEC).

  Installation intended to meet the UL and cUL requirements must follow the instructions provided in “Wiring Notes” as a minimum standard. Follow all local codes that exceed UL and cUL requirements. Refer to the technical data label affixed to the AC motor drive and the motor nameplate for electrical data.

  The "Line Fuse Specification" in Appendix B, lists the recommended fuse part number for each VFD-EL Series part number. These fuses (or equivalent) must be used on all installations where compliance with U.L. standards is a required.



CAUTION!

1. Make sure that power is only applied to the R/L1, S/L2, T/L3 terminals. Failure to comply may result in damage to the equipment. The voltage and current should lie within the range as indicated on the nameplate.
2. All the units must be grounded directly to a common ground terminal to prevent lightning strike or electric shock.
3. Please make sure to fasten the screw of the main circuit terminals to prevent sparks which is made by the loose screws due to vibration.
4. Check following items after finishing the wiring:
   A. Are all connections correct?
   B. No loose wires?
   C. No short-circuits between terminals or to ground?

DANGER!

1. A charge may still remain in the DC bus capacitors with hazardous voltages even if the power has been turned off. To prevent personal injury, please ensure that the power is turned off and wait ten minutes for the capacitors to discharge to safe voltage levels before opening the AC motor drive.
2. Only qualified personnel familiar with AC motor drives is allowed to perform installation, wiring and commissioning.
3. Make sure that the power is off before doing any wiring to prevent electric shock.

2.1 Wiring

Users must connect wires according to the circuit diagrams on the following pages. Do not plug a modem or telephone line to the RS-485 communication port or permanent damage may result. The pins 1 & 2 are the power supply for the optional copy keypad only and should not be used for RS-485 communication.

Figure 1 for models of VFD-EL Series
VFD002EL11A/21A, VFD004EL11A/21A, VFD007EL11A/21A, VFD015EL21A, VFD022EL21A

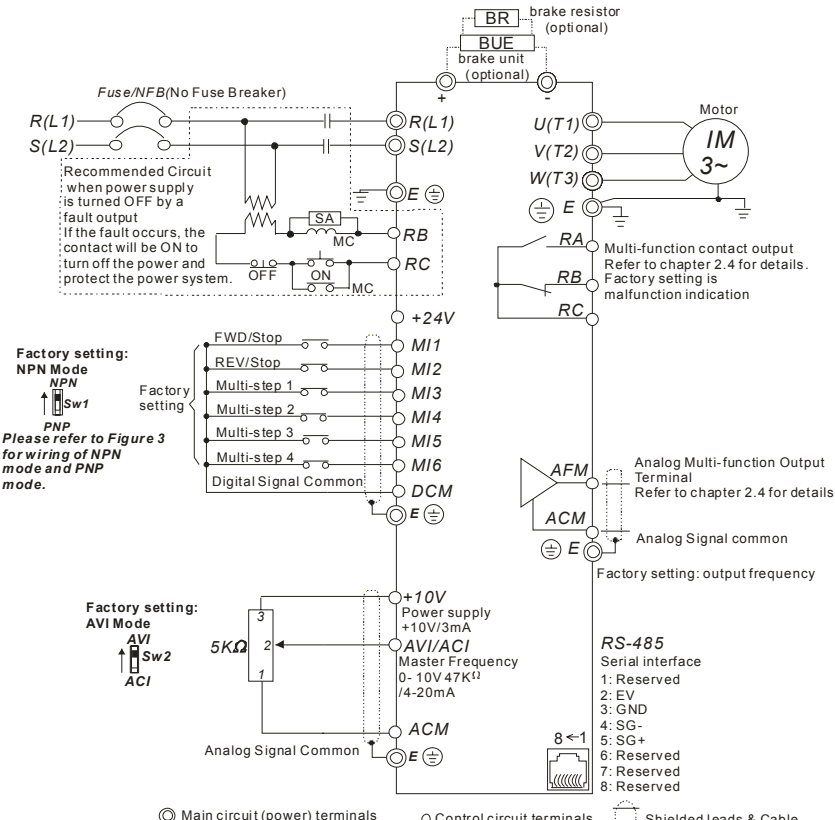

Figure 2 for models of VFD-EL Series
VFD002EL23A, VFD004EL23A/43A, VFD007EL23A/43A, VFD015EL23A/43A,
VFD022EL23A/43A, VFD037EL23A/43A

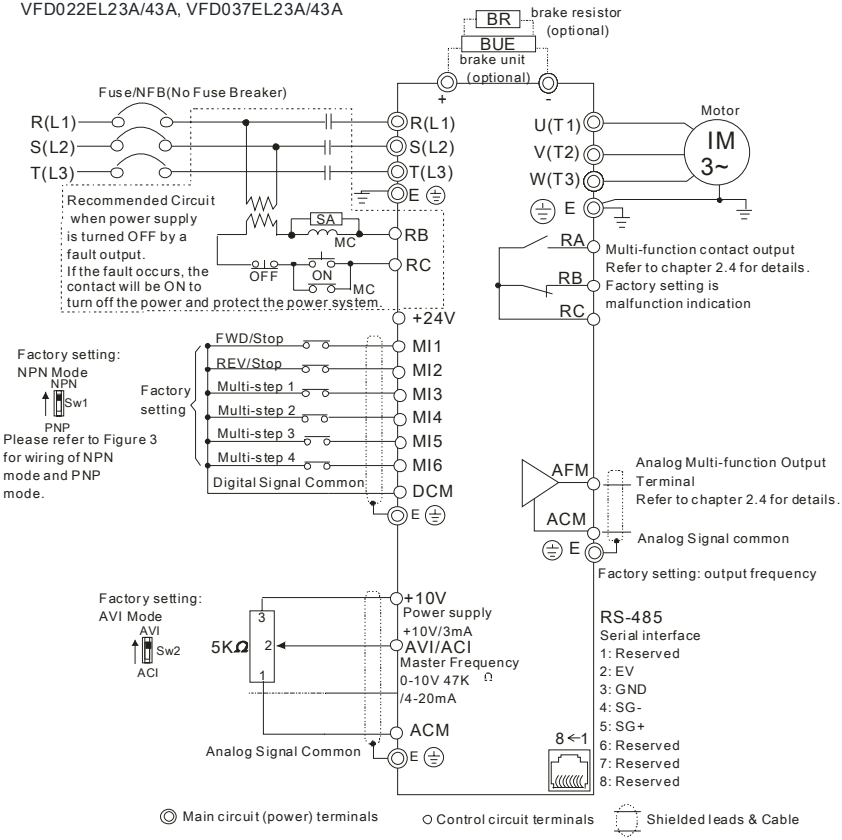

Figure 3 Wiring for NPN mode and PNP mode

A. NPN mode without external power

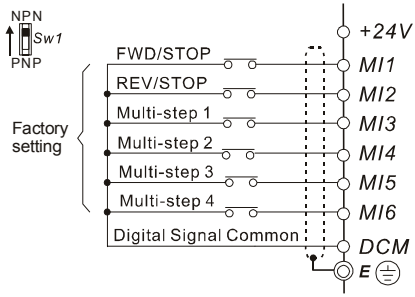

B. NPN mode with external power

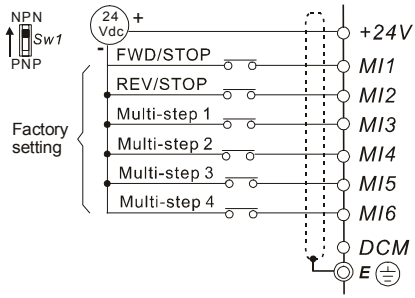

C. PNP mode without external power

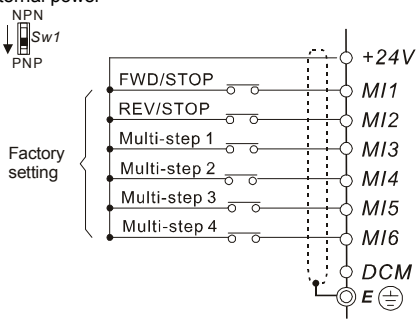

D. PNP mode with external power

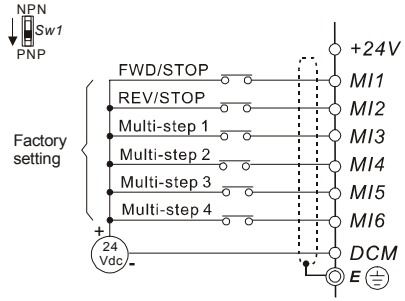

CAUTION!

1. The wiring of main circuit and control circuit should be separated to prevent erroneous actions.
2. Please use shield wire for the control wiring and not to expose the peeled-off net in front of the terminal.
3. Please use the shield wire or tube for the power wiring and ground the two ends of the shield wire or tube.
4. Damaged insulation of wiring may cause personal injury or damage to circuits/equipment if it comes in contact with high voltage.
5. The AC motor drive, motor and wiring may cause interference. To prevent the equipment damage, please take care of the erroneous actions of the surrounding sensors and the equipment.
6. When the AC drive output terminals U/T1, V/T2, and W/T3 are connected to the motor terminals U/T1, V/T2, and W/T3, respectively. To permanently reverse the direction of motor rotation, switch over any of the two motor leads.
7. With long motor cables, high capacitive switching current peaks can cause over-current, high leakage current or lower current readout accuracy. To prevent this, the motor cable should be less than 20m for 3.7kW models and below. And the cable should be less than 50m for 5.5kW models and above. For longer motor cables use an AC output reactor.
8. The AC motor drive, electric welding machine and the greater horsepower motor should be grounded separately.
9. Use ground leads that comply with local regulations and keep them as short as possible.
10. No brake resistor is built in the VFD-EL series, it can install brake resistor for those occasions that use higher load inertia or frequent start/stop. Refer to Appendix B for details.
11. Multiple VFD-EL units can be installed in one location. All the units should be grounded directly to a common ground terminal, as shown in the figure below. **Ensure there are no ground loops.**

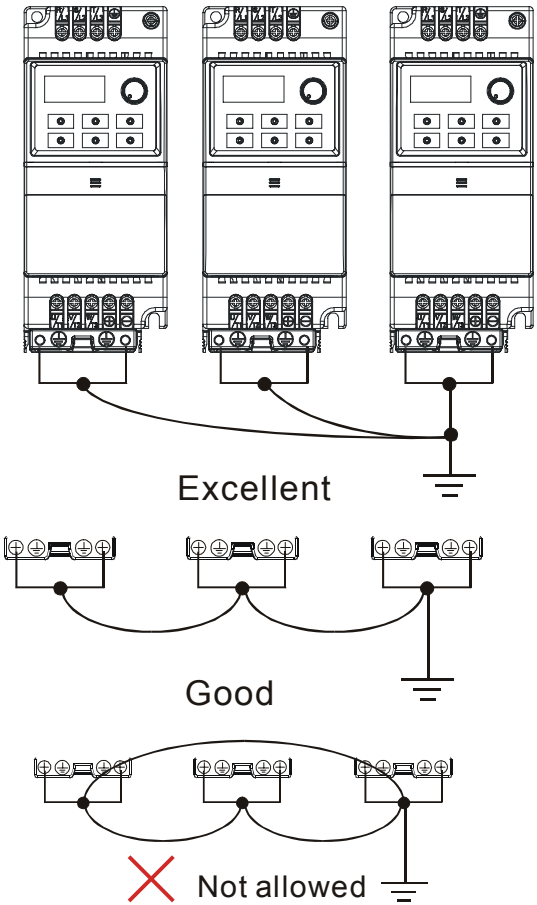
Excellent
Good
Not allowed

2.2 External Wiring

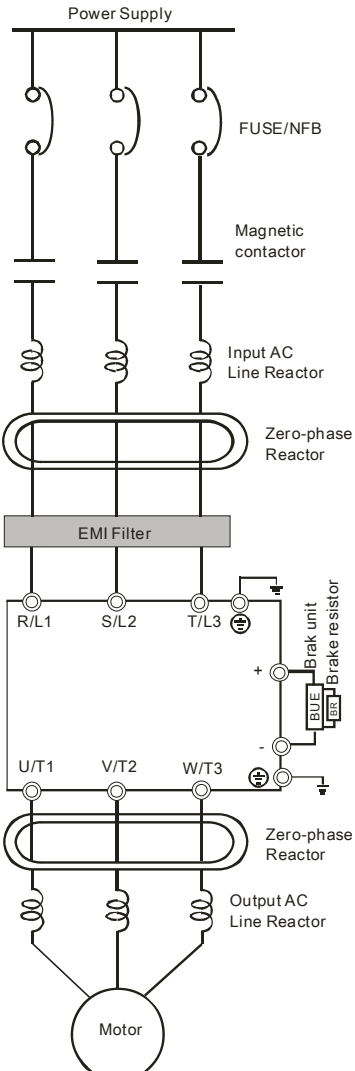

Items	Explanations
Power supply	Please follow the specific power supply requirements shown in Appendix A.
Fuse/NFB (Optional)	There may be an inrush current during power up. Please check the chart of Appendix B and select the correct fuse with rated current. Use of an NFB is optional.
Magnetic contactor (Optional)	Please do not use a Magnetic contactor as the I/O switch of the AC motor drive, as it will reduce the operating life cycle of the AC drive.
Input AC Line Reactor (Optional)	Used to improve the input power factor, to reduce harmonics and provide protection from AC line disturbances (surges, switching spikes, short interruptions, etc.). AC line reactor should be installed when the power supply capacity is 500kVA or more or advanced capacity is activated. The wiring distance should be ≤ 10m. Refer to appendix B for details.
Zero-phase Reactor (Ferrite Core Common Choke) (Optional)	Zero phase reactors are used to reduce radio noise especially when audio equipment is installed near the inverter. Effective for noise reduction on both the input and output sides. Attenuation quality is good for a wide range from AM band to 10MHz. Appendix B specifies the zero phase reactor. (RF220X00A)
EMI filter	It is used to reduce electromagnetic interference. All 230V and 460V models are built-in EMI filter.
Brake Resistor and Brake Unit (Optional)	Used to reduce the deceleration time of the motor. Please refer to the chart in Appendix B for specific Brake Resistors.
Output AC Line Reactor (Optional)	Motor surge voltage amplitude depends on motor cable length. For applications with long motor cable (>20m), it is necessary to install a reactor at the inverter output side.

2.3 Main Circuit

2.3.1 Main Circuit Connection

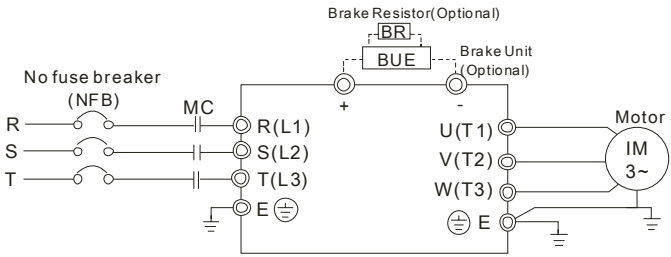

Terminal Symbol	Explanation of Terminal Function
R/L1, S/L2, T/L3	AC line input terminals (1-phase/3-phase)
U/T1, V/T2, W/T3	AC drive output terminals for connecting 3-phase induction motor
+, -	Connections for External Brake unit (BUE series)
⏚	Earth connection, please comply with local regulations.

CAUTION!

Mains power terminals (R/L1, S/L2, T/L3)

- Connect these terminals (R/L1, S/L2, T/L3) via a non-fuse breaker or earth leakage breaker to 3-phase AC power (some models to 1-phase AC power) for circuit protection. It is unnecessary to consider phase-sequence.
- It is recommended to add a magnetic contactor (MC) in the power input wiring to cut off power quickly and reduce malfunction when activating the protection function of AC motor drives. Both ends of the MC should have an R-C surge absorber.
- Please make sure to fasten the screw of the main circuit terminals to prevent sparks which is made by the loose screws due to vibration.

- Please use voltage and current within the regulation shown in Appendix A.
- When using a GFCI (Ground Fault Circuit Interrupter), select a current sensor with sensitivity of 200mA, and not less than 0.1-second detection time to avoid nuisance tripping. For specific GFCI of the AC motor drive, please select a current sensor with sensitivity of 30mA or above.
- Do NOT run/stop AC motor drives by turning the power ON/OFF. Run/stop AC motor drives by RUN/STOP command via control terminals or keypad. If you still need to run/stop AC drives by turning power ON/OFF, it is recommended to do so only ONCE per hour.
- Do NOT connect 3-phase models to a 1-phase power source.

Output terminals for main circuit (U, V, W)

- The factory setting of the operation direction is forward running. The method to control the operation direction is to set by the communication parameters. Please refer to the group 9 for details.
- When it needs to install the filter at the output side of terminals U/T1, V/T2, W/T3 on the AC motor drive. Please use inductance filter. Do not use phase-compensation capacitors or L-C (Inductance-Capacitance) or R-C (Resistance-Capacitance), unless approved by Delta.
- DO NOT connect phase-compensation capacitors or surge absorbers at the output terminals of AC motor drives.
- Use well-insulated motor, suitable for inverter operation.

Terminals [+, -] for connecting brake resistor

- All VFD-EL series don't have a built-in brake chopper. Please connect an external optional brake unit (BUE-series) and brake resistor. Refer to BUE series user manual for details.
- When not used, please leave the terminals [+, -] open.

2.3.2 Main Circuit Terminals

Frame A

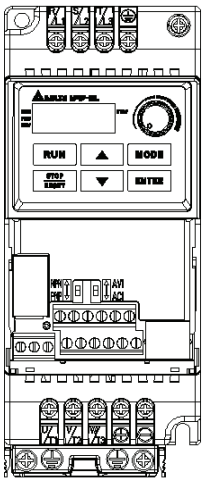

Frame B

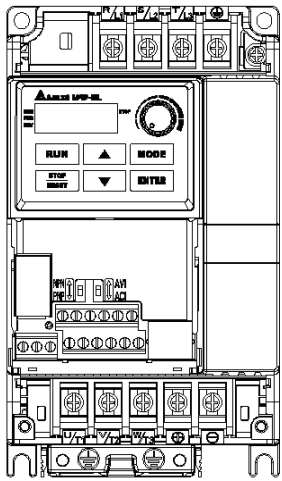

Frame	Power Terminals	Torque	Wire	Wire type
A	R/L1, S/L2, T/L3	14.2-16.3kgf-cm (12-14in-lbf)	12-18 AWG. (3.3-0.8mm^2)	Copper only, 75°C
	U/T1, V/T2, W/T3, ⏚			
B	R/L1, S/L2, T/L3	16.3-19.3kgf-cm (14-17in-lbf)	8-18 AWG. (8.4-0.8mm^2)	Copper only, 75°C
	U/T1, V/T2, W/T3			
	+, -, ⏚			

NOTE

Frame A: VFD002EL11A/21A/23A, VFD004EL11A/21A/23A/43A, VFD007EL21A/23A/43A, VFD015EL23A/43A

Frame B: VFD007EL11A, VFD015EL21A, VFD022EL21A/23A/43A, VFD037EL23A/43A

2.4 Control Terminals

Circuit diagram for digital inputs (NPN current 16mA.)

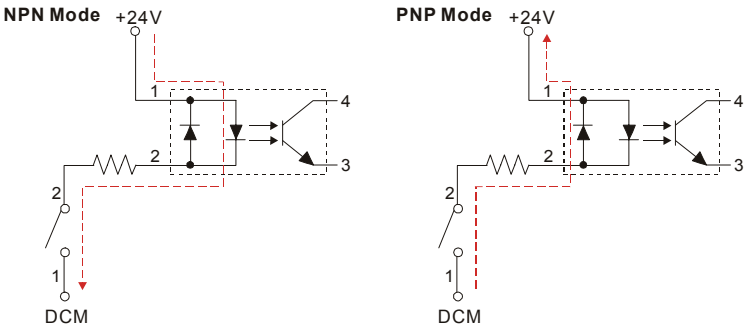

The position of the control terminals

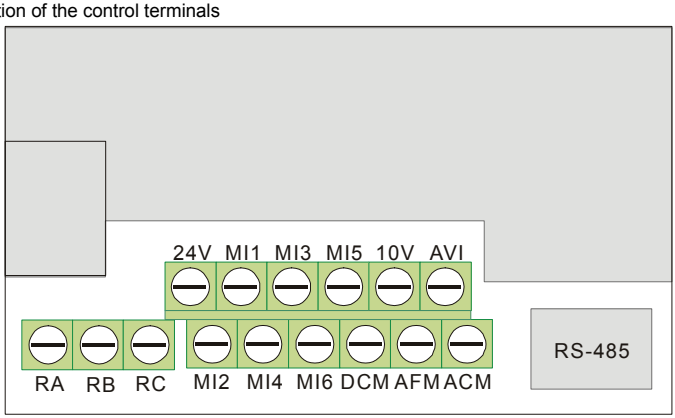

Terminal symbols and functions

Terminal Symbol	Terminal Function	Factory Settings (NPN mode) ON: Connect to DCM
MI1	Forward-Stop command	ON: Run in MI1 direction OFF: Stop acc. to Stop Method
MI2	Reverse-Stop command	ON: Run in MI2 direction OFF: Stop acc. to Stop Method
MI3	Multi-function Input 3	Refer to Pr.04.05 to Pr.04.08 for programming the Multi-function Inputs.
MI4	Multi-function Input 4	

Terminal Symbol	Terminal Function	Factory Settings (NPN mode) ON: Connect to DCM
MI5	Multi-function Input 5	ON: the activation current is 5.5mA. OFF: leakage current tolerance is 10 μ A.
MI6	Multi-function Input 6	
+24V	DC Voltage Source	+24VDC, 50mA used for PNP mode.
DCM	Digital Signal Common	Common for digital inputs and used for NPN mode.
RA	Multi-function Relay output (N.O.) a	Resistive Load: 5A(N.O.)/3A(N.C.) 240VAC 5A(N.O.)/3A(N.C.) 24VDC Inductive Load: 1.5A(N.O.)/0.5A(N.C.) 240VAC 1.5A(N.O.)/0.5A(N.C.) 24VDC Refer to Pr.03.00 for programming
RB	Multi-function Relay output (N.C.) b	
RC	Multi-function Relay common	
+10V	Potentiometer power supply	+10VDC 3mA
AVI	Analog voltage Input 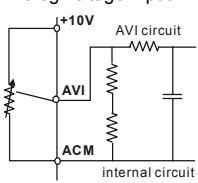	Impedance: 47kΩ Resolution: 10 bits Range: 0 ~ 10VDC/4~20mA = 0 ~ Max. Output Frequency (Pr.01.00) Selection: Pr.02.00, Pr.02.09, Pr.10.00 Set-up: Pr.04.14 ~ Pr.04.17
ACM	Analog control signal (common)	Common for AVI= and AFM
AFM	Analog output meter 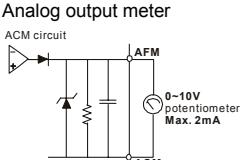	0 to 10V, 2mA Impedance: 47Ω Output current 2mA max Resolution: 8 bits Range: 0 ~ 10VDC Function: Pr.03.03 to Pr.03.04 **NOTE** The voltage output type for this analog signal is PWM. It needs to read value by the movable coil meter and is not suitable for A/D signal conversion.

NOTE: Control signal wiring size: 18 AWG (0.75 mm^2) with shielded wire.

Analog inputs (AVI, ACM)

- Analog input signals are easily affected by external noise. Use shielded wiring and keep it as short as possible (<20m) with proper grounding. If the noise is inductive, connecting the shield to terminal ACM can bring improvement.
- If the analog input signals are affected by noise from the AC motor drive, please connect a capacitor (0.1 μ F and above) and ferrite core as indicated in the following diagrams:

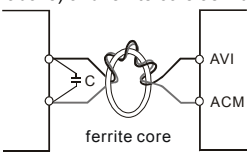

wind each wires 3 times or more around the core

Digital inputs (MI1~MI6, DCM)

- When using contacts or switches to control the digital inputs, please use high quality components to avoid contact bounce.

General

- Keep control wiring as far away as possible from the power wiring and in separate conduits to avoid interference. If necessary let them cross only at 90º angle.
- The AC motor drive control wiring should be properly installed and not touch any live power wiring or terminals.

NOTE

- If a filter is required for reducing EMI (Electro Magnetic Interference), install it as close as possible to AC drive. EMI can also be reduced by lowering the Carrier Frequency.

DANGER!

Damaged insulation of wiring may cause personal injury or damage to circuits/equipment if it comes in contact with high voltage.

The specification for the control terminals

The position of the control terminals

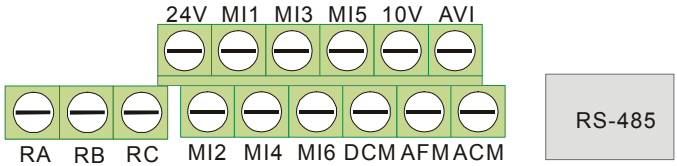

Frame	Torque	Wire
A, B	5.1-8.1kgf-cm (4.4-7in-lbf)	16-24 AWG. (1.3-0.2mm^2)

NOTE

Frame A: VFD002EL11A/21A/23A, VFD004EL11A/21A/23A/43A, VFD007EL21A/23A/43A, VFD015EL23A/43A

Frame B: VFD007EL11A, VFD015EL21A, VFD022EL21A/23A/43A, VFD037EL23A/43A

This page intentionally left blank

Chapter 3 Keypad and Start Up

3.1 Description of the Digital Keypad



❶ Status Display
Display the driver's current status.

❷ LED Display
Indicates frequency, voltage, current, user defined units and etc.

❸ Potentiometer
For master Frequency setting.

❹ RUN Key
Start AC drive operation.

❺ UP and DOWN Key
Set the parameter number and changes the numerical data, such as Master Frequency.

❻ MODE
Change between different display mode.

❼ STOP/RESET
Stops AC drive operation and reset the drive after fault occurred.

There are four LEDs on the keypad:

LED STOP: It will light up when the motor is stop.

LED RUN: It will light up when the motor is running.

LED FWD: It will light up when the motor is forward running.

LED REV: It will light up when the motor is reverse running.

Display Message	Descriptions
	Displays the AC drive Master Frequency.
	Displays the actual output frequency at terminals U/T1, V/T2, and W/T3.
	User defined unit (where U = F x Pr.00.05)
	Displays the output current at terminals U/T1, V/T2, and W/T3.
	Displays the AC motor drive forward run status.
	Displays the AC motor drive reverse run status.
	The counter value (C).
	Displays the selected parameter.
	Displays the actual stored value of the selected parameter.
	External Fault.
	Display “End” for approximately 1 second if input has been accepted. After a parameter value has been set, the new value is automatically stored in memory. To modify an entry, use the ▲ and ▼ keys.
	Display “Err”, if the input is invalid.

3.2 How to Operate the Digital Keypad

Setting Mode



NOTE: In the selection mode, press MODE to set the parameters.

Setting parameters



NOTE : In the parameter setting mode, you can press MODE to return the selecting mode.

To shift data



Setting direction (When operation source is digital keypad)

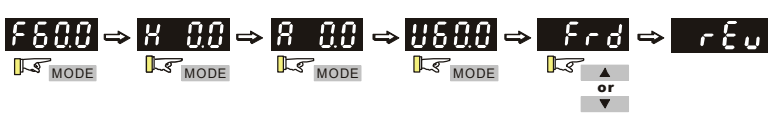

3.3 Reference Table for the 7-segment LED Display of the Digital Keypad

Digit	0	1	2	3	4	5	6	7	8	9
LED Display	0	1	2	3	4	5	6	7	8	9

English alphabet	A	b	Cc	d	E	F	G	Hh	Ii	Jj
LED Display	A	b	Cc	d	E	F	G	Hh	Ii	Jj

English alphabet	K	L	n	Oo	P	q	r	S	Tt	U
LED Display	K	L	n	Oo	P	q	r	S	Tt	U

English alphabet	v	Y	Z							
LED Display	v	Y	Z							

3.4 Operation Method

The operation method can be set via communication, control terminals and digital keypad.



<table>
<tr><th>Operation Method</th><th>Frequency Source</th><th>Operation Command Source</th></tr>
<tr><td>Operate from the communication</td><td colspan="2">When setting communication by the PC, it needs to use VFD-USB01 or IFD8500 converter to connect to the PC.
Refer to the communication address 2000H and 2101H setting for details.</td></tr>
<tr><td>Operate from external signal</td><td colspan="2">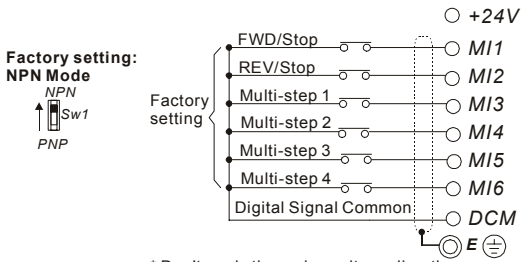
</td></tr>
<tr><td></td><td>MI3-DCM (Set Pr.04.05=10)
MI4-DCM (Set Pr.04.06=11)</td><td>External terminals input:
MI1-DCM (set to FWD/STOP)
MI2-DCM (set to REV/STOP)</td></tr>
<tr><td>Operate from the digital keypad</td><td></td><td>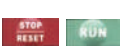
</td></tr>
</table>

3.5 Trial Run

You can perform a trial run by using digital keypad with the following steps. by following steps

1. Setting frequency to F5.0 by pressing ▼.
2. If you want to change direction from forward running to reverse running: 1. press MODE key to find FWD. 2. press UP/DOWN key to REV to finish changing direction.

1. After applying the power, verify that LED display shows F 60.0Hz.
2. Press ▼ key to set frequency to around 5Hz.
3. Press RUN key for forward running. And if you want to change to reverse running, you should press ▼. And if you want to decelerate to stop, please press STOP RESET key.
4. Check following items:
   - Check if the motor direction of rotation is correct.
   - Check if the motor runs steadily without abnormal noise and vibration.
   - Check if acceleration and deceleration are smooth.

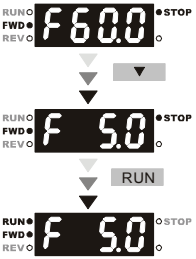

If the results of trial run are normal, please start the formal run.

NOTE

1. Stop running immediately if any fault occurs and refer to the troubleshooting guide for solving the problem.
2. Do NOT touch output terminals U/T1, V/T2, W/T3 when power is still applied to R/L1, S/L2, T/L3 even when the AC motor drive has stopped. The DC-link capacitors may still be charged to hazardous voltage levels, even if the power has been turned off.
3. To avoid damage to components, do not touch them or the circuit boards with metal objects or your bare hands.

Chapter 4 Parameters

The VFD-EL parameters are divided into 11 groups by property for easy setting. In most applications, the user can finish all parameter settings before start-up without the need for re-adjustment during operation.

The 11 groups are as follows:

Group 0: User Parameters
Group 1: Basic Parameters
Group 2: Operation Method Parameters
Group 3: Output Function Parameters
Group 4: Input Function Parameters
Group 5: Multi-Step Speed Parameters
Group 6: Protection Parameters
Group 7: Motor Parameters
Group 8: Special Parameters
Group 9: Communication Parameters
Group 10: PID Control Parameters

4.1 Summary of Parameter Settings

↗: The parameter can be set during operation.

Group 0 User Parameters

Parameter	Explanation	Settings	Factory Setting	Customer
00.00	Identity Code of the AC motor drive	Read-only	##	
00.01	Rated Current Display of the AC motor drive	Read-only	#.#	
00.02	Parameter Reset	0: Parameter can be read/written 1: All parameters are read only 8: Keypad lock 9: All parameters are reset to factory settings (50Hz, 230V/400V or 220V/380V depends on Pr.00.12) 10: All parameters are reset to factory settings (60Hz, 220V/440V)	0	
↗00.03	Start-up Display Selection	0: Display the frequency command value (Fxxx) 1: Display the actual output frequency (Hxxx) 2: Display the content of user-defined unit (Uxxx) 3: Multifunction display, see Pr.00.04 4: FWD/REV command	0	
↗00.04	Content of Multi-function Display	0: Display the content of user-defined unit (Uxxx) 1: Display the counter value (c) 2: Display the status of multi-function input terminals (d) 3: Display DC-BUS voltage (u) 4: Display output voltage (E) 5: Display PID analog feedback signal value (b) (%) 6: Output power factor angle (n)	0	

Parameter	Explanation	Settings	Factory Setting	Customer
		7: Display output power (P) 8: Display PID setting and feedback signal 9: Display AVI (I) (V) 10: Display ACI (i) (mA) 11: Display the temperature of IGBT (h) (°C)		
✓00.05	User-Defined Coefficient K	0. 1 to 160.0	1.0	
00.06	Software Version	Read-only	#.##	
00.07	Reserved			
00.08	Password Input	0 to 9999	0	
00.09	Password Set	0 to 9999	0	
00.10	Reserved			
00.11	Reserved			
00.12	50Hz Base Voltage Selection	0: 230V/400V 1: 220V/380V	0	
00.13	User-defined Value 1 (correspond to max. frequency)	0 to 9999	0	
00.14	Position of Decimal Point of User-defined Value 1	0 to 3	0	

Group 1 Basic Parameters

Parameter	Explanation	Settings	Factory Setting	Customer
01.00	Maximum Output Frequency (Fmax)	50.00 to 600.0 Hz	60.00	
01.01	Maximum Voltage Frequency (Fbase)	0.10 to 600.0 Hz	60.00	
01.02	Maximum Output Voltage (Vmax)	115V/230V series: 0.1V to 255.0V 460V series: 0.1V to 510.0V	220.0 440.0	
01.03	Mid-Point Frequency (Fmid)	0.10 to 600.0 Hz	1.50	

Parameter	Explanation	Settings	Factory Setting	Customer
01.04	Mid-Point Voltage (Vmid)	115V/230V series: 0.1V to 255.0V 460V series: 0.1V to 510.0V	10.0 20.0	
01.05	Minimum Output Frequency (Fmin)	0.10 to 600.0 Hz	1.50	
01.06	Minimum Output Voltage (Vmin)	115V/230V series: 0.1V to 255.0V 460V series: 0.1V to 510.0V	10.0 20.0	
01.07	Output Frequency Upper Limit	0.1 to 120.0%	110.0	
01.08	Output Frequency Lower Limit	0.0 to100.0 %	0.0	
✓01.09	Accel Time 1	0.1 to 600.0 / 0.01 to 600.0 sec	10.0	
✓01.10	Decel Time 1	0.1 to 600.0 / 0.01 to 600.0 sec	10.0	
✓01.11	Accel Time 2	0.1 to 600.0 / 0.01 to 600.0 sec	10.0	
✓01.12	Decel Time 2	0.1 to 600.0 / 0.01 to 600.0 sec	10.0	
✓01.13	Jog Acceleration Time	0.1 to 600.0 / 0.01 to 600.0 sec	1.0	
✓01.14	Jog Deceleration Time	0.1 to 600.0 / 0.01 to 600.0 sec	1.0	
✓01.15	Jog Frequency	0.10 Hz to Fmax (Pr.01.00) Hz	6.00	
01.16	Auto acceleration / deceleration (refer to Accel/Decel time setting)	0: Linear Accel/Decel 1: Auto Accel, Linear Decel 2: Linear Accel, Auto Decel 3: Auto Accel/Decel (Set by load) 4: Auto Accel/Decel (set by Accel/Decel Time setting)	0	
01.17	Acceleration S-Curve	0.0 to 10.0 / 0.00 to 10.00 sec	0.0	
01.18	Deceleration S-Curve	0.0 to 10.0 / 0.00 to 10.00 sec	0.0	
01.19	Accel/Decel Time Unit	0: Unit: 0.1 sec 1: Unit: 0.01 sec	0	

Group 2 Operation Method Parameters

Parameter	Explanation	Settings	Factory Setting	Customer
✓02.00	Source of First Master Frequency Command	0: Digital keypad UP/DOWN keys or Multi-function Inputs UP/DOWN. Last used frequency saved. 1: 0 to +10V from AVI 2: 4 to 20mA from ACI 3: RS-485 (RJ-45) communication 4: Digital keypad potentiometer	1	
✓02.01	Source of First Operation Command	0: Digital keypad 1: External terminals. Keypad STOP/RESET enabled. 2: External terminals. Keypad STOP/RESET disabled. 3: RS-485 (RJ-45) communication. Keypad STOP/RESET enabled. 4: RS-485 (RJ-45) communication. Keypad STOP/RESET disabled.	1	
02.02	Stop Method	0: STOP: ramp to stop; E.F.: coast to stop 1: STOP: coast to stop; E.F.: coast to stop 2: STOP: ramp to stop; E.F.: ramp to stop 3: STOP: coast to stop; E.F.: ramp to stop	0	
02.03	PWM Carrier Frequency Selections	2 to 12kHz	8	
02.04	Motor Direction Control	0: Enable forward/reverse operation 1: Disable reverse operation 2: Disabled forward operation	0	
02.05	Line Start Lockout	0: Disable. Operation status is not changed even if operation command source Pr.02.01 is changed. 1: Enable. Operation status is not changed even if operation command source Pr.02.01 is changed. 2: Disable. Operation status will change if operation command source Pr.02.01 is changed.	1	

Parameter	Explanation	Settings	Factory Setting	Customer
		3: Enable. Operation status will change if operation command source Pr.02.01 is changed.		
02.06	Loss of ACI Signal (4-20mA)	0: Decelerate to 0 Hz 1: Coast to stop and display “AErr” 2: Continue operation by last frequency command	1	
02.07	Up/Down Mode	0: by UP/DOWN Key 1: Based on accel/decel time 2: Constant speed (Pr.02.08) 3: Pulse input unit (Pr.02.08)	0	
02.08	Accel/Decel Rate of Change of UP/DOWN Operation with Constant Speed	0.01~10.00 Hz	0.01	
✓02.09	Source of Second Frequency Command	0: Digital keypad UP/DOWN keys or Multi-function Inputs UP/DOWN. Last used frequency saved. 1: 0 to +10V from AVI 2: 4 to 20mA from ACI 3: RS-485 (RJ-45) communication 4: Digital keypad potentiometer	0	
✓02.10	Combination of the First and Second Master Frequency Command	0: First Master Frequency Command 1: First Master Frequency Command+ Second Master Frequency Command 2: First Master Frequency Command - Second Master Frequency Command	0	
✓02.11	Keypad Frequency Command	0.00 to 600.0Hz	60.00	
✓02.12	Communication Frequency Command	0.00 to 600.0Hz	60.00	
02.13	The Selections for Saving Keypad or Communication Frequency Command	0: Save Keypad & Communication Frequency 1: Save Keypad Frequency only 2: Save Communication Frequency only	0	

Parameter	Explanation	Settings	Factory Setting	Customer
02.14	Initial Frequency Selection (for keypad & RS485)	0: by Current Freq Command 1: by Zero Freq Command 2: by Frequency Display at Stop	0	
02.15	Initial Frequency Setpoint (for keypad & RS485)	0.00 ~ 600.0Hz	60.00	
02.16	Display the Master Freq Command Source	Read Only Bit0=1: by First Freq Source (Pr.02.00) Bit1=1: by Second Freq Source (Pr.02.09) Bit2=1: by Multi-input function	##	
02.17	Display the Operation Command Source	Read Only Bit0=1: by Digital Keypad Bit1=1: by RS485 communication Bit2=1: by External Terminal 2/3 wire mode Bit3=1: by Multi-input function	##	
02.18	User-defined Value 2 Setting	0 to Pr.00.13	0	
02.19	User-defined Value 2	0 to 9999	##	

Group 3 Output Function Parameters

Parameter	Explanation	Settings	Factory Setting	Customer
03.00	Multi-function Output Relay (RA1, RB1, RC1)	0: No function 1: AC drive operational 2: Master frequency attained 3: Zero speed 4: Over torque detection 5: Base-Block (B.B.) indication 6: Low-voltage indication 7: Operation mode indication 8: Fault indication 9: Desired frequency attained 10: Terminal count value attained	8	

Parameter	Explanation	Settings	Factory Setting	Customer
		11: Preliminary count value attained		
		12: Over Voltage Stall supervision 13: Over Current Stall supervision 14: Heat sink overheat warning		
		15: Over Voltage supervision 16: PID supervision 17: Forward command 18: Reverse command 19: Zero speed output signal 20: Warning(FbE,Cexx, AoL2, AUE, SAvE) 21: Brake control (Desired frequency attained) 22: AC motor drive ready		
03.01	Reserved			
03.02	Desired Frequency Attained	0.00 to 600.0Hz	0.00	
✓03.03	Analog Output Signal Selection (AFM)	0: Analog frequency meter 1: Analog current meter	0	
✓03.04	Analog Output Gain	1 to 200%	100	
03.05	Terminal Count Value	0 to 9999	0	
03.06	Preliminary Count Value	0 to 9999	0	
03.07	EF Active When Terminal Count Value Attained	0: Terminal count value attained, no EF display 1: Terminal count value attained, EF active	0	
03.08	Fan Control	0: Fan always ON 1: 1 minute after AC motor drive stops, fan will be OFF 2: Fan ON when AC motor drive runs, fan OFF when AC motor drive stops 3: Fan ON when preliminary heatsink temperature attained	0	
03.09	Reserved			

Parameter	Explanation	Settings	Factory Setting	Customer
03.10	Reserved			
03.11	Brake Release Frequency	0.00 to 20.00Hz	0.00	
03.12	Brake Engage Frequency	0.00 to 20.00Hz	0.00	
03.13	Display the Status of Relay	Read only	##	

Group 4 Input Function Parameters

Parameter	Explanation	Settings	Factory Setting	Customer
↗04.00	Keypad Potentiometer Bias	0.0 to 100.0 %	0.0	
↗04.01	Keypad Potentiometer Bias Polarity	0: Positive bias 1: Negative bias	00	
↗04.02	Keypad Potentiometer Gain	0.1 to 200.0 %	100.0	
04.03	Keypad Potentiometer Negative Bias, Reverse Motion Enable/Disable	0: No negative bias command 1: Negative bias: REV motion enabled	0	
04.04	2-wire/3-wire Operation Control Modes	0: 2-wire: FWD/STOP, REV/STOP 1: 2-wire: FWD/REV, RUN/STOP 2: 3-wire operation	0	
04.05	Multi-function Input Terminal (MI3)	0: No function 1: Multi-Step speed command 1 2: Multi-Step speed command 2	1	
04.06	Multi-function Input Terminal (MI4)	3: Multi-Step speed command 3 4: Multi-Step speed command 4 5: External reset	2	
04.07	Multi-function Input Terminal (MI5)	6: Accel/Decel inhibit 7: Accel/Decel time selection command 8: Jog Operation	3	

Parameter	Explanation	Settings	Factory Setting	Customer
04.08	Multi-function Input Terminal (MI6)	9: External base block 10: Up: Increment master frequency 11: Down: Decrement master frequency 12: Counter Trigger Signal 13: Counter reset 14: E.F. External Fault Input 15: PID function disabled 16: Output shutoff stop 17: Parameter lock enable 18: Operation command selection (external terminals) 19: Operation command selection(keypad) 20: Operation command selection(communication) 21: FWD/REV command 22: Source of second frequency command	4	
04.09	Multi-function Input Contact Selection	Bit0:MI1 Bit1:MI2 Bit2:MI3 Bit3:MI4 Bit4:MI5 Bit5:MI6 0:N.O., 1:N.C. P.S.:MI1 to MI3 will be invalid when it is 3-wire control.	0	
04.10	Digital Terminal Input Debouncing Time	1 to 20 (*2ms)	1	
04.11	Min AVI Voltage	0.0 to 10.0V	0.0	
04.12	Min AVI Frequency	0.0 to 100.0%	0.0	
04.13	Max AVI Voltage	0.0 to 10.0V	10.0	
04.14	Max AVI Frequency	0.0 to 100.0%	100.0	

Parameter	Explanation	Settings	Factory Setting	Customer
04.15	Min ACI Current	0.0 to 20.0mA	4.0	
04.16	Min ACI Frequency	0.0 to 100.0%	0.0	
04.17	Max ACI Current	0.0 to 20.0mA	20.0	
04.18	Max ACI Frequency	0.0 to 100.0%	100.0	
04.19 | 04.25	Reserved			
04.26	Display the Status of Multi-function Input Terminal	Read only. Bit0: MI1 Status Bit1: MI2 Status Bit2: MI3 Status Bit3: MI4 Status Bit4: MI5 Status Bit5: MI6 Status	##	
04.27	Internal/External Multi-function Input Terminals Selection	0~4095	0	
✓04.28	Internal Terminal Status	0~4095	0	

Group 5 Multi-Step Speed Parameters

Parameter	Explanation	Settings	Factory Setting	Customer
✓05.00	1st Step Speed Frequency	0.00 to 600.0 Hz	0.00	
✓05.01	2nd Step Speed Frequency	0.00 to 600.0 Hz	0.00	
✓05.02	3rd Step Speed Frequency	0.00 to 600.0 Hz	0.00	
✓05.03	4th Step Speed Frequency	0.00 to 600.0 Hz	0.00	
✓05.04	5th Step Speed Frequency	0.00 to 600.0 Hz	0.00	

Parameter	Explanation	Settings	Factory Setting	Customer
✓05.05	6th Step Speed Frequency	0.00 to 600.0 Hz	0.00	
✓05.06	7th Step Speed Frequency	0.00 to 600.0 Hz	0.00	
✓05.07	8th Step Speed Frequency	0.00 to 600.0 Hz	0.00	
✓05.08	9th Step Speed Frequency	0.00 to 600.0 Hz	0.00	
✓05.09	10th Step Speed Frequency	0.00 to 600.0 Hz	0.00	
✓05.10	11th Step Speed Frequency	0.00 to 600.0 Hz	0.00	
✓05.11	12th Step Speed Frequency	0.00 to 600.0 Hz	0.00	
✓05.12	13th Step Speed Frequency	0.00 to 600.0 Hz	0.00	
✓05.13	14th Step Speed Frequency	0.00 to 600.0 Hz	0.00	
✓05.14	15th Step Speed Frequency	0.00 to 600.0 Hz	0.00	

Group 6 Protection Parameters

Parameter	Explanation	Settings	Factory Setting	Customer
06.00	Over-Voltage Stall Prevention	115/230V series: 330.0V to 410.0V 460V series: 660.0V to 820.0V 0.0: Disable over-voltage stall prevention	390.0V 780.0V	
06.01	Over-Current Stall Prevention during Accel	0:Disable 20 to 250%	170	
06.02	Over-Current Stall Prevention during Operation	0:Disable 20 to 250%	170	
06.03	Over-Torque Detection Mode (OL2)	0: Disabled 1: Enabled during constant speed operation. After the over-torque is detected, keep running until OL1 or OL occurs.	0	

Parameter	Explanation	Settings	Factory Setting	Customer
		2: Enabled during constant speed operation. After the over-torque is detected, stop running. 3: Enabled during accel. After the over-torque is detected, keep running until OL1 or OL occurs. 4: Enabled during accel. After the over-torque is detected, stop running.		
✓06.04	Over-Torque Detection Level	10 to 200%	150	
06.05	Over-Torque Detection Time	0.1 to 60.0 sec	0.1	
06.06	Electronic Thermal Overload Relay Selection	0: Standard motor (self cooled by fan) 1: Special motor (forced external cooling) 2: Disabled	2	
06.07	Electronic Thermal Characteristic	30 to 600 sec	60	
06.08	Present Fault Record	0: No fault 1: Over current (oc) 2: Over voltage (ov) 3: IGBT Overheat (oH1) 4: Reserved 5: Overload (oL) 6: Overload1 (oL1) 7: Motor over load (oL2)	0	
06.09	Second Most Recent Fault Record	8: External fault (EF) 9: Current exceeds 2 times rated current during accel.(ocA) 10: Current exceeds 2 times rated current during decel.(ocd) 11: Current exceeds 2 times rated current during steady state operation (ocn) 12: Ground fault (GFF) 13: Reserved		

Parameter	Explanation	Settings	Factory Setting	Customer
06.10	Third Most Recent Fault Record	14: Phase-Loss (PHL) 15: Reserved 16: Auto Acel/Decel failure (CFA) 17: SW/Password protection (codE) 18: Power Board CPU WRITE failure (cF1.0) 19: Power Board CPU READ failure (cF2.0) 20: CC, OC Hardware protection failure (HPF1) 21: OV Hardware protection failure (HPF2) 22: GFF Hardware protection failure (HPF3) 23: OC Hardware protection failure (HPF4) 24: U-phase error (cF3.0) 25: V-phase error (cF3.1) 26: W-phase error (cF3.2) 27: DCBUS error (cF3.3) 28: IGBT Overheat (cF3.4) 29: Reserved 30: Reserved 31: Reserved 32: ACI signal error (AErr) 33: Reserved 34: Motor PTC overheat protection (PtC1) 35-40: Reserved		
06.11	Fourth Most Recent Fault Record			
06.12	Fifth Most Recent Fault Record			

Group 7 Motor Parameters

Parameter	Explanation	Settings	Factory Setting	Customer
✓07.00	Motor Rated Current	30 %FLA to 120% FLA	FLA	
✓07.01	Motor No-Load Current	0%FLA to 99% FLA	0.4*FLA	

Parameter	Explanation	Settings	Factory Setting	Customer
↗07.02	Torque Compensation	0.0 to 10.0	0.0	
↗07.03	Slip Compensation	0.00 to 10.00	0.00	
07.04 | 07.09	Reserved			
07.10	Accumulative Motor Operation Time (Min.)	0 to 1439 Min.	0	
07.11	Accumulative Motor Operation Time (Day)	0 to 65535 Day	0	
07.12	Motor PTC Overheat Protection	0: Disable 1: Enable	0	
07.13	Input Debouncing Time of the PTC Protection	0~9999(*2ms)	100	
07.14	Motor PTC Overheat Protection Level	0.1~10.0V	2.4	
07.15	Motor PTC Overheat Warning Level	0.1~10.0V	1.2	
07.16	Motor PTC Overheat Reset Delta Level	0.1~5.0V	0.6	
07.17	Treatment of the Motor PTC Overheat	0: Warn and RAMP to stop 1: Warn and COAST to stop 2: Warn and keep running	0	

Group 8 Special Parameters

Parameter	Explanation	Settings	Factory Setting	Customer
08.00	DC Brake Current Level	0 to 100%	0	
08.01	DC Brake Time during Start-Up	0.0 to 60.0 sec	0.0	

Parameter	Explanation	Settings	Factory Setting	Customer
08.02	DC Brake Time during Stopping	0.0 to 60.0 sec	0.0	
08.03	Start-Point for DC Brake	0.00 to 600.0Hz	0.00	
08.04	Momentary Power Loss Operation Selection	0: Operation stops after momentary power loss 1: Operation continues after momentary power loss, speed search starts with the Master Frequency reference value 2: Operation continues after momentary power loss, speed search starts with the minimum frequency	0	
08.05	Maximum Allowable Power Loss Time	0.1 to 5.0 sec	2.0	
08.06	Base-block Speed Search	0: Disable speed search 1: Speed search starts with last frequency command 2: Starts with minimum output frequency	1	
08.07	B.B. Time for Speed Search	0.1 to 5.0 sec	0.5	
08.08	Current Limit for Speed Search	30 to 200%	150	
08.09	Skip Frequency 1 Upper Limit	0.00 to 600.0 Hz	0.00	
08.10	Skip Frequency 1 Lower Limit	0.00 to 600.0 Hz	0.00	
08.11	Skip Frequency 2 Upper Limit	0.00 to 600.0 Hz	0.00	
08.12	Skip Frequency 2 Lower Limit	0.00 to 600.0 Hz	0.00	
08.13	Skip Frequency 3 Upper Limit	0.00 to 600.0 Hz	0.00	
08.14	Skip Frequency 3 Lower Limit	0.00 to 600.0 Hz	0.00	
08.15	Auto Restart After Fault	0 to 10 (0=disable)	0	
08.16	Auto Reset Time at Restart after Fault	0.1 to 6000 sec	60.0	

Parameter	Explanation	Settings	Factory Setting	Customer
08.17	Auto Energy Saving	0: Disable 1: Enable	0	
08.18	AVR Function	0: AVR function enable 1: AVR function disable 2: AVR function disable for decel. 3: AVR function disable for stop	0	
08.19	Reserved			
✓08.20	Compensation Coefficient for Motor Instability	0.0~5.0	0.0	

Group 9 Communication Parameters

Parameter	Explanation	Settings	Factory Setting	Customer
09.00	Communication Address	1 to 254	1	
09.01	Transmission Speed	0: Baud rate 4800bps 1: Baud rate 9600bps 2: Baud rate 19200bps 3: Baud rate 38400bps	1	
09.02	Transmission Fault Treatment	0: Warn and keep operating 1: Warn and ramp to stop 2: Warn and coast to stop 3: No warning and keep operating	3	
09.03	Time-out Detection	0.1 ~ 120.0 seconds 0.0: Disable	0.0	
09.04	Communication Protocol	0: 7,N,2 (Modbus, ASCII) 1: 7,E,1 (Modbus, ASCII) 2: 7,O,1 (Modbus, ASCII) 3: 8,N,2 (Modbus, RTU)	0	

Parameter	Explanation	Settings	Factory Setting	Customer
		4: 8,E,1 (Modbus, RTU) 5: 8,O,1 (Modbus, RTU) 6: 8,N,1 (Modbus, RTU) 7: 8,E,2 (Modbus, RTU) 8: 8,O,2 (Modbus, RTU) 9: 7,N,1 (Modbus, ASCII) 10: 7,E,2 (Modbus, ASCII) 11: 7,O,2 (Modbus, ASCII)		
09.05	Reserved			
09.06	Reserved			
09.07	Response Delay Time	0 ~ 200 (unit: 2ms)	1	

Group 10 PID Control Parameters

Parameter	Explanation	Settings	Factory Setting	Customer
10.00	PID Set Point Selection	0: Disable PID operation 1: Keypad (based on Pr.02.00) 2: 0 to +10V from AVI 3: 4 to 20mA from ACI 4: PID set point (Pr.10.11)	0	
10.01	Input Terminal for PID Feedback	0: Positive PID feedback from external terminal AVI (0 ~ +10VDC) 1: Negative PID feedback from external terminal AVI (0 ~ +10VDC) 2: Positive PID feedback from external terminal ACI (4 ~ 20mA) 3: Negative PID feedback from external terminal ACI (4 ~ 20mA)	0	
✓10.02	Proportional Gain (P)	0.0 to 10.0	1.0	
✓10.03	Integral Time (I)	0.00 to 100.0 sec (0.00=disable)	1.00	

Parameter	Explanation	Settings	Factory Setting	Customer
✓10.04	Derivative Control (D)	0.00 to 1.00 sec	0.00	
10.05	Upper Bound for Integral Control	0 to 100%	100	
10.06	Primary Delay Filter Time	0.0 to 2.5 sec	0.0	
10.07	PID Output Freq Limit	0 to 110%	100	
10.08	PID Feedback Signal Detection Time	0.0 to 3600 sec (0.0 disable)	60.0	
10.09	Treatment of the Erroneous PID Feedback Signals	0: Warn and RAMP to stop 1: Warn and COAST to stop 2: Warn and keep operation	0	
10.10	Gain Over the PID Detection Value	0.0 to 10.0	1.0	
✓10.11	Source of PID Set point	0.00 to 600.0Hz	0.00	
10.12	PID Feedback Level	1.0 to 50.0%	10.0	
10.13	Detection Time of PID Feedback	0.1 to 300.0 sec	5.0	
10.14	Sleep/Wake Up Detection Time	0.0 to 6550 sec	0.0	
10.15	Sleep Frequency	0.00 to 600.0 Hz	0.00	
10.16	Wakeup Frequency	0.00 to 600.0 Hz	0.00	
10.17	Minimum PID Output Frequency Selection	0: By PID control 1: By minimum output frequency (Pr.01.05)	0	
10.18	PID Control Detection Signal Reference	1.0 to 99.9	99.9	
10.19	PID Calculation Mode Selection	0: Series mode 1: Parallel mode	0	

Parameter	Explanation	Settings	Factory Setting	Customer
10.20	Treatment of the Erroneous PID Feedback Level	0: Keep operating 1: Coast to stop 2: Ramp to stop 3: Ramp to stop and restart after time set in Pr.10.21	0	
10.21	Restart Delay Time after Erroneous PID Deviation Level	1 to 9999 sec	60	
✓10.22	Set Point Deviation Level	0 to 100%	0	
10.23	Detection Time of Set Point Deviation Level	0 to 9999 sec	10	
✓10.24	Offset Level of Liquid Leakage	0 to 50%	0	
✓10.25	Liquid Leakage Change Detection	0 to 100% (0: disable)	0	
✓10.26	Time Setting for Liquid Leakage Change	0.1 to 10.0 sec (0: disable)	0.5	
10.27 | 10.33	Reserved			

4.2 Parameter Settings for Applications

Speed Search

Applications	Purpose	Functions	Related Parameters
Windmill, winding machine, fan and all inertia loads	Restart free-running motor	Before the free-running motor is completely stopped, it can be restarted without detection of motor speed. The AC motor drive will auto search motor speed and will accelerate when its speed is the same as the motor speed.	08.04~08.08

DC Brake before Running

Applications	Purpose	Functions	Related Parameters
When e.g. windmills, fans and pumps rotate freely by wind or flow without applying power	Keep the free-running motor at standstill.	If the running direction of the free-running motor is not steady, please execute DC brake before start-up.	08.00 08.01

Energy Saving

Applications	Purpose	Functions	Related Parameters
Punching machines fans, pumps and precision machinery	Energy saving and less vibrations	Energy saving when the AC motor drive runs at constant speed, yet full power acceleration and deceleration For precision machinery it also helps to lower vibrations.	08.17

Multi-step Operation

Applications	Purpose	Functions	Related Parameters
Conveying machinery	Cyclic operation by multi-step speeds.	To control 15-step speeds and duration by simple contact signals.	04.05~04.08 05.00~05.14

Switching acceleration and deceleration times

Applications	Purpose	Functions	Related Parameters
Auto turntable for conveying machinery	Switching acceleration and deceleration times by external signal	When an AC motor drive drives two or more motors, it can reach high-speed but still start and stop smoothly.	01.09~01.12 04.05~04.08

Overheat Warning

Applications	Purpose	Functions	Related Parameters
Air conditioner	Safety measure	When AC motor drive overheats, it uses a thermal sensor to have overheat warning.	03.00 04.05~04.08

Two-wire/three-wire

Applications	Purpose	Functions	Related Parameters
General application	To run, stop, forward and reverse by external terminals	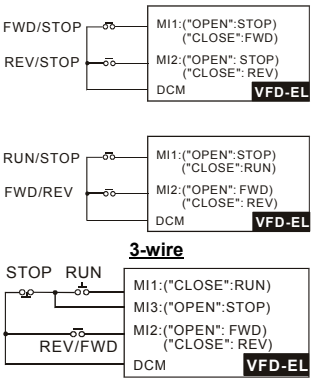	02.00 02.01 02.09 04.04

Operation Command

Applications	Purpose	Functions	Related Parameters
General application	Selecting the source of control signal	Selection of AC motor drive control by external terminals, digital keypad or RS485.	02.01 04.05~04.08

Frequency Hold

Applications	Purpose	Functions	Related Parameters
General application	Acceleration/ deceleration pause	Hold output frequency during Acceleration/deceleration	04.05~04.08

Auto Restart after Fault

Applications	Purpose	Functions	Related Parameters
Air conditioners, remote pumps	For continuous and reliable operation without operator intervention	The AC motor drive can be restarted/reset automatically up to 10 times after a fault occurs.	08.15~08.16

Emergency Stop by DC Brake

Applications	Purpose	Functions	Related Parameters
High-speed rotors	Emergency stop without brake resistor	AC motor drive can use DC brake for emergency stop when quick stop is needed without brake resistor. When used often, take motor cooling into consideration.	08.00 08.02 08.03

Over-torque Setting

Applications	Purpose	Functions	Related Parameters
Pumps, fans and extruders	To protect machines and to have continuous/ reliable operation	The over-torque detection level can be set. Once OC stall, OV stall and over-torque occurs, the output frequency will be adjusted automatically. It is suitable for machines like fans and pumps that require continuous operation.	06.00~06.05

Upper/Lower Limit Frequency

Applications	Purpose	Functions	Related Parameters
Pump and fan	Control the motor speed within upper/lower limit	When user cannot provide upper/lower limit, gain or bias from external signal, it can be set individually in AC motor drive.	01.07 01.08

Skip Frequency Setting

Applications	Purpose	Functions	Related Parameters
Pumps and fans	To prevent machine vibrations	The AC motor drive cannot run at constant speed in the skip frequency range. Three skip frequency ranges can be set.	08.09~08.14

Carrier Frequency Setting

Applications	Purpose	Functions	Related Parameters
General application	Low noise	The carrier frequency can be increased when required to reduce motor noise.	02.03

Keep Running when Frequency Command is Lost

Applications	Purpose	Functions	Related Parameters
Air conditioners	For continuous operation	When the frequency command is lost by system malfunction, the AC motor drive can still run. Suitable for intelligent air conditioners.	02.06

Output Signal during Running

Applications	Purpose	Functions	Related Parameters
General application	Provide a signal for running status	Signal available to stop braking (brake release) when the AC motor drive is running. (This signal will disappear when the AC motor drive is free-running.)	03.00

Output Signal in Zero Speed

Applications	Purpose	Functions	Related Parameters
General application	Provide a signal for running status	When the output frequency is lower than the min. output frequency, a signal is given for external system or control wiring.	03.00

Output Signal at Desired Frequency

Applications	Purpose	Functions	Related Parameters
General application	Provide a signal for running status	When the output frequency is at the desired frequency (by frequency command), a signal is given for external system or control wiring (frequency attained).	03.00

Output Signal for Base Block

Applications	Purpose	Functions	Related Parameters
General application	Provide a signal for running status	When executing Base Block, a signal is given for external system or control wiring.	03.00

Overheat Warning for Heat Sink

Applications	Purpose	Functions	Related Parameters
General application	For safety	When heat sink is overheated, it will send a signal for external system or control wiring.	03.00

Multi-function Analog Output

Applications	Purpose	Functions	Related Parameters
General application	Display running status	The value of frequency, output current/voltage can be read by connecting a frequency meter or voltage/current meter.	03.06

4.3 Description of Parameter Settings

Group 0: User Parameters **This parameter can be set during operation.**

00.00 Identity Code of the AC Motor Drive

Settings Read Only Factory setting: ##

00.01 Rated Current Display of the AC Motor Drive

Settings Read Only Factory setting: #.#

Pr. 00.00 displays the identity code of the AC motor drive. The capacity, rated current, rated voltage and the max. carrier frequency relate to the identity code. Users can use the following table to check how the rated current, rated voltage and max. carrier frequency of the AC motor drive correspond to the identity code.

Pr.00.01 displays the rated current of the AC motor drive. By reading this parameter the user can check if the AC motor drive is correct.

115V/230V Series						
kW	0.2	0.4	0.75	1.5	2.2	3.7
HP	0.25	0.5	1.0	2.0	3.0	5.0
Pr.00-00	0	2	4	6	8	10
Rated Output Current (A)	1.6	2.5	4.2	7.5	11.0	17.0
Max. Carrier Frequency	12kHz					

460V Series					
kW	0.4	0.75	1.5	2.2	3.7
HP	0.5	1.0	2.0	3.0	5.0
Pr.00-00	3	5	7	9	11
Rated Output Current (A)	1.5	2.5	4.2	5.5	8.2
Max. Carrier Frequency	12kHz				

00.02 Parameter Reset

Factory Setting: 0

Settings 0 Parameter can be read/written

1 All parameters are read-only

8 Keypad lock

9 All parameters are reset to factory settings (50Hz, 230V/400V or 220V/380V depends on Pr.00.12)

10 All parameters are reset to factory settings (60Hz, 115V/220V/440V)

🕮 This parameter allows the user to reset all parameters to the factory settings except the fault records (Pr.06.08 ~ Pr.06.12).

50Hz: Pr.01.00 and Pr.01.01 are set to 50Hz and Pr.01.02 will be set by Pr.00.12.

60Hz: Pr.01.00 and Pr.01.01 are set to 60Hz and Pr.01.02 is set to 115V, 230V or 460V.

🕮 When Pr.00.02=1, all parameters are read-only. To write all parameters, set Pr.00.02=0.

00.03 Start-up Display Selection

Factory Setting: 0

Settings	0	Display the frequency command value (Fxxx)	
	1	Display the actual output frequency (Hxxx)	
	2	Display the output current in A supplied to the motor (Axxx)	
	3	Display the content of user-defined unit (Uxxx)	
	4	FWD/REV command	

🕮 This parameter determines the start-up display page after power is applied to the drive.

00.04 Content of Multi-function Display

Factory Setting: 0

Settings	0	Display the content of user-defined unit (Uxxx)	
	1	Display the counter value which counts the number of pulses on TRG terminal	
	2	Display status of multi-input terminals (d)	
	3	Display the actual DC BUS voltage in VDC of the AC motor drive	
	4	Display the output voltage in VAC of terminals U/T1, V/T2, W/T3 to the motor.	
	5	Display PID analog feedback signal value in %	
	6	Display the power factor angle in º of terminals U/T1, V/T2, W/T3 to the motor	
	7	Display the output power in kW of terminals U, V and W to the motor.	
	8	Display PID setting and feedback signal.	

00.04 Content of Multi-function Display

9	Display the signal of AVI analog input terminal (V).	
10	Display the signal of ACI analog input terminal (mA).	
11	Display the temperature of IGBT (h) in ℃	

🕮 When Pr00.03 is set to 03, the display is according to the setting of Pr00.04.

00.05 User Defined Coefficient K Unit: 0. 1

Settings 0. 1 to d 160.0 Factory Setting: 1.0

🕮 The coefficient K determines the multiplying factor for the user-defined unit.

The display value is calculated as follows:

U (User-defined unit) = Actual output frequency * K (Pr.00.05)

Example:

A conveyor belt runs at 13.6m/s at motor speed 60Hz.

K = 13.6/60 = 0.22 (0.226667 rounded to 1 decimal), therefore Pr.00.05=0.2

With Frequency command 35Hz, display shows U and 35*0.2=7.0m/s.

(To increase accuracy, use K=2.2 or K=22.7 and disregard decimal point.)

00.06 Software Version

Settings Read Only

Display #.##

00.07 Reserved

00.08 Password Input Unit: 1

Settings 0 to 9999 Factory Setting: 0

Display 0~2 (times of wrong password)

🕮 The function of this parameter is to input the password that is set in Pr.00.09. Input the correct password here to enable changing parameters. You are limited to a maximum of 3 attempts. After 3 consecutive failed attempts, a blinking “codE” will show up to force the user to restart the AC motor drive in order to try again to input the correct password.

00.09	Password Set		Unit: 1
	Settings	0 to 9999	Factory Setting: 0
	Display	0	No password set or successful input in Pr. 00.08
		1	Password has been set

🕮 To set a password to protect your parameter settings.

If the display shows 0, no password is set or password has been correctly entered in Pr.00.08.

All parameters can then be changed, including Pr.00.09.

The first time you can set a password directly. After successful setting of password the display will show 1.

Be sure to record the password for later use.

To cancel the parameter lock, set the parameter to 0 after inputting correct password into Pr. 00.08.

The password consists of min. 1 digits and max. 4 digits.

🕮 How to make the password valid again after decoding by Pr.00.08:

Method 1: Re-input original password into Pr.00.09 (Or you can enter a new password if you want to use a changed or new one).

Method 2: After rebooting, password function will be recovered.

Password Decode Flow Chart

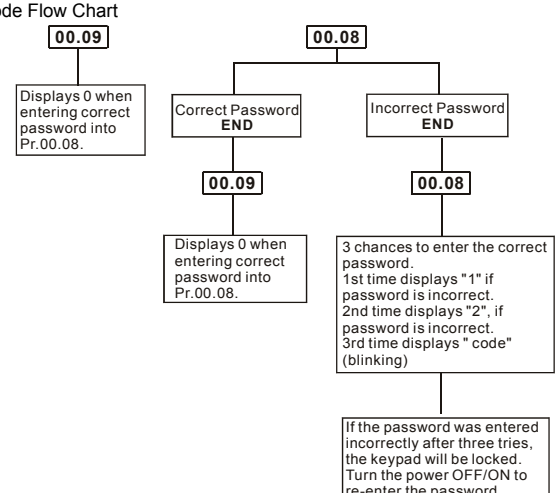

00.10 Reserved

00.11 Reserved

00.12 50Hz Base Voltage Selection

Factory Setting: 0

Settings 0 230V/400V
1 220V/380V

🕮 This parameter determines the base voltage for 50Hz.

00.13 User-defined Value 1 (correspond to max. frequency) Unit: 1

Settings 0 to 9999 Factory Setting: 0

🕮 This parameter corresponds to max. frequency.

🕮 When Pr.00-13 is not set to 0, “F” will disappear in frequency mode and the right-most digit will blink. Many ranges will be changed to Pr.00.13, including potentiometer, UP/DOWN key, AVI, ACI, multi-step, JOG function and PID function.

🕮 When Pr.00.13 is not set to 0 and the frequency source is from communication, please use Pr.02-18 to change frequency setting because it can’t be set at address 2001H.

00.14 Position of Decimal Point of User-defined Value 1 Unit: 1

Settings 0 to 3 Factory Setting: 0

🕮 It is used to set the position of decimal point of Pr.00.13.

🕮 Example: when you want to set 10.0, you need to set Pr.00.13 to 100 and Pr.00.14 to 1.

Group 1: Basic Parameters

01.00	Maximum Output Frequency (Fmax)		Unit: 0.01
	Settings	50.00 to 600.0 Hz	Factory Setting: 60.00

This parameter determines the AC motor drive's Maximum Output Frequency. All the AC motor drive frequency command sources (analog inputs 0 to +10V and 4 to 20mA) are scaled to correspond to the output frequency range.

01.01	Maximum Voltage Frequency (Fbase)		Unit: 0.01
	Settings	0.10 to 600.0Hz	Factory Setting: 60.00

This value should be set according to the rated frequency of the motor as indicated on the motor nameplate. Maximum Voltage Frequency determines the v/f curve ratio. For example, if the drive is rated for 460 VAC output and the Maximum Voltage Frequency is set to 60Hz, the drive will maintain a constant ratio of 7.66 V/Hz (460V/60Hz=7.66V/Hz). This parameter value must be equal to or greater than the Mid-Point Frequency (Pr.01.03).

01.02	Maximum Output Voltage (Vmax)		Unit: 0.1
	Settings	115V/230V series 0.1 to 255.0V	Factory Setting: 220.0
		460V series 0.1 to 510.0V	Factory Setting: 440.0

This parameter determines the Maximum Output Voltage of the AC motor drive. The Maximum Output Voltage setting must be smaller than or equal to the rated voltage of the motor as indicated on the motor nameplate. This parameter value must be equal to or greater than the Mid-Point Voltage (Pr.01.04).

01.03	Mid-Point Frequency (Fmid)		Unit: 0.01
	Settings	0.10 to 600.0Hz	Factory Setting: 1.50

This parameter sets the Mid-Point Frequency of the V/f curve. With this setting, the V/f ratio between Minimum Frequency and Mid-Point frequency can be determined. This parameter must be equal to or greater than Minimum Output Frequency (Pr.01.05) and equal to or less than Maximum Voltage Frequency (Pr.01.01).

01.04	Mid-Point Voltage (Vmid)		Unit: 0.1
	Settings	115V/230V series 0.1 to 255.0V	Factory Setting: 10.0
		460V series 0.1 to 510.0V	Factory Setting: 20.0

This parameter sets the Mid-Point Voltage of any V/f curve. With this setting, the V/f ratio between Minimum Frequency and Mid-Point Frequency can be determined. This parameter must be equal to or greater than Minimum Output Voltage (Pr.01.06) and equal to or less than Maximum Output Voltage (Pr.01.02).

01.05	Minimum Output Frequency (Fmin)	Unit: 0.01
	Settings 0.10 to 600.0Hz	Factory Setting: 1.50

This parameter sets the Minimum Output Frequency of the AC motor drive. This parameter must be equal to or less than Mid-Point Frequency (Pr.01.03).

01.06	Minimum Output Voltage (Vmin)		Unit: 0.1
	Settings	115V/230V series 0.1 to 255.0V	Factory Setting: 10.0
		460V series 0.1 to 510.0V	Factory Setting: 20.0

This parameter sets the Minimum Output Voltage of the AC motor drive. This parameter must be equal to or less than Mid-Point Voltage (Pr.01.04).

The settings of Pr.01.01 to Pr.01.06 have to meet the condition of Pr.01.02 ≥ Pr.01.04 ≥ Pr.01.06 and Pr.01.01 ≥ Pr.01.03 ≥ Pr.01.05.

01.07	Output Frequency Upper Limit	Unit: 0.1
	Settings 0.1 to 120.0%	Factory Setting: 110.0

This parameter must be equal to or greater than the Output Frequency Lower Limit (Pr.01.08). The Maximum Output Frequency (Pr.01.00) is regarded as 100%.

Output Frequency Upper Limit value = (Pr.01.00 * Pr.01.07)/100.

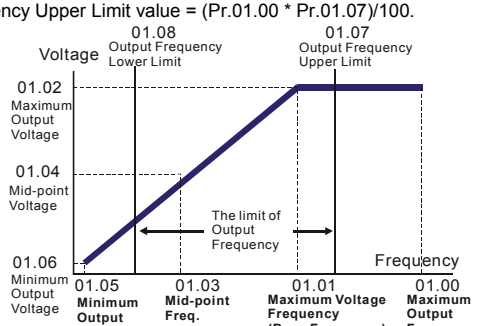

V/f Curve

01.08	Output Frequency Lower Limit	Unit: 0.1
	Settings 0.0 to 100.0%	Factory Setting: 0.0

- The Upper/Lower Limits are to prevent operation errors and machine damage.
- If the Output Frequency Upper Limit is 50Hz and the Maximum Output Frequency is 60Hz, the Output Frequency will be limited to 50Hz.
- If the Output Frequency Lower Limit is 10Hz, and the Minimum Output Frequency (Pr.01.05) is set to 1.0Hz, then any Command Frequency between 1.0-10Hz will generate a 10Hz output from the drive. If the command frequency is less than 1.0Hz, drive will be in ready status without output.
- This parameter must be equal to or less than the Output Frequency Upper Limit (Pr.01.07).
- The Output Frequency Lower Limit value = (Pr.01.00 * Pr.01.08) /100.

01.09	Acceleration Time 1 (Taccel 1)	Unit: 0.1/0.01
01.10	Deceleration Time 1 (Tdecel 1)	Unit: 0.1/0.01
01.11	Acceleration Time 2 (Taccel 2)	Unit: 0.1/0.01
01.12	Deceleration Time 2 (Tdecel 2)	Unit: 0.1/0.01
	Settings 0.1 to 600.0 sec / 0.01 to 600.0 sec	Factory Setting: 10.0

- Acceleration/deceleration time 1 or 2 can be switched by setting the external terminals MI3~MI12 to 7 (set Pr.04.05~Pr.04.08 to 7 or Pr.11.06~Pr.11.11 to 7).

01.19	Accel/Decel Time Unit	
		Factory Setting: 0
	Settings 0	Unit: 0.1 sec
	1	Unit: 0.01 sec

- The Acceleration Time is used to determine the time required for the AC motor drive to ramp from 0 Hz to Maximum Output Frequency (Pr.01.00). The rate is linear unless S-Curve is "Enabled"; see Pr.01.17.
- The Deceleration Time is used to determine the time required for the AC motor drive to decelerate from the Maximum Output Frequency (Pr.01.00) down to 0 Hz. The rate is linear unless S-Curve is "Enabled.", see Pr.01.18.
- The Acceleration/Deceleration Time 1, 2, 3, 4 are selected according to the Multi-function Input Terminals Settings. See Pr.04.05 to Pr.04.08 for more details.

In the diagram shown below, the Acceleration/Deceleration Time of the AC motor drive is the time between 0 Hz to Maximum Output Frequency (Pr.01.00). Suppose the Maximum Output Frequency is 60 Hz, Minimum Output Frequency (Pr.01.05) is 1.0 Hz, and Acceleration/Deceleration Time is 10 seconds. The actual time for the AC motor drive to accelerate from start-up to 60 Hz and to decelerate from 60Hz to 1.0Hz is in this case 9.83 seconds. ((60-1) * 10/60=9.83secs).

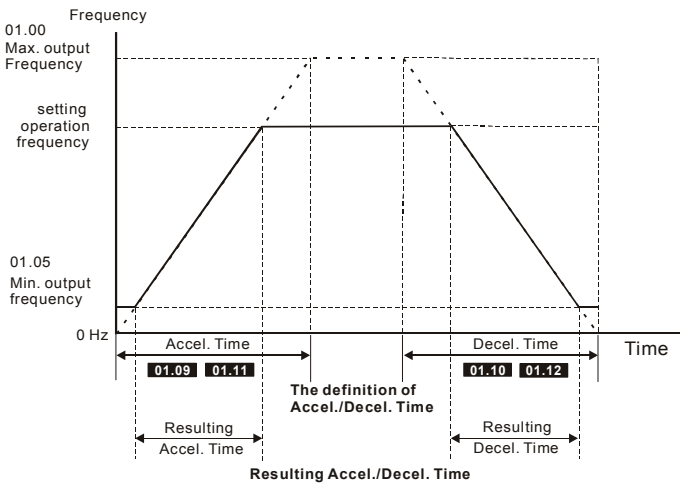

01.13	✓Jog Acceleration Time		Unit: 0.1/0.01
	Settings	0.1 to 600.0/0.01 to 600.0 sec	Factory Setting: 1.0
01.14	✓Jog Deceleration Time		Unit: 0.1/0.01
	Settings	0.1 to 600.0/0.01 to 600.0 sec	Factory Setting: 1.0
01.15	✓Jog Frequency		Unit: 0.01
	Settings	0.10 to Fmax (Pr.01.00)Hz	Factory Setting: 6.00

Only external terminal JOG (MI3 to MI12) can be used. When the Jog command is “ON”, the AC motor drive will accelerate from Minimum Output Frequency (Pr.01.05) to Jog Frequency (Pr.01.15). When the Jog command is “OFF”, the AC motor drive will decelerate from Jog Frequency to zero. The used Accel/Decel time is set by the Jog Accel/Decel time (Pr.01.13, Pr.01.14).

Before using the JOG command, the drive must be stopped first. And during Jog operation, other operation commands are not accepted, except FORWARD/REVERSE commands.

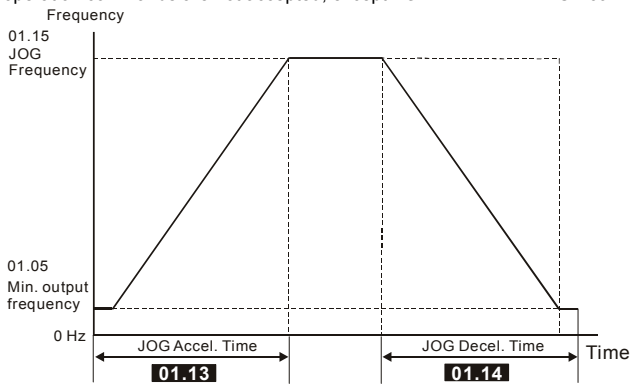

The definition of JOG Accel./Decel. Time

01.16 Auto-Acceleration / Deceleration

Factory Setting: 0

Settings	0	Linear acceleration / deceleration
	1	Auto acceleration, linear Deceleration.
	2	Linear acceleration, auto Deceleration.
	3	Auto acceleration / deceleration (set by load)
	4	Auto acceleration / deceleration (set by Accel/Decel Time setting)

With Auto acceleration / deceleration it is possible to reduce vibration and shocks during starting/stopping the load.

During Auto acceleration the torque is automatically measured and the drive will accelerate to the set frequency with the fastest acceleration time and the smoothest starting current.

During Auto deceleration, regenerative energy is measured and the motor is smoothly stopped with the fastest deceleration time.

But when this parameter is set to 4, the actual accel/decel time will be equal to or more than parameter Pr.01.09 ~Pr.01.12.

Auto acceleration/deceleration makes the complicated processes of tuning unnecessary. It makes operation efficient and saves energy by acceleration without stall and deceleration without brake resistor.

In applications with brake resistor or brake unit, Auto deceleration shall not be used.

01.17	Acceleration S-Curve	Unit: 0.1/0.01
01.18	Deceleration S-Curve	Unit: 0.1/0.01

Factory Setting: 0

Settings	0.0	S-curve disabled
	0.1 to 10.0/0.01 to 10.00	S-curve enabled (10.0/10.00 is the smoothest)

This parameter is used to ensure smooth acceleration and deceleration via S-curve.

The S-curve is disabled when set to 0.0 and enabled when set to 0.1 to 10.0/0.01 to 10.00.

Setting 0.1/0.01 gives the quickest and setting 10.0/10.00 the longest and smoothest S-curve.

The AC motor drive will not follow the Accel/Decel Times in Pr.01.09 to Pr.01.12.

The diagram below shows that the original setting of the Accel/Decel Time is only for reference when the S-curve is enabled. The actual Accel/Decel Time depends on the selected S-curve (0.1 to 10.0).

The total Accel. Time=Pr.01.09 + Pr.01.17 or Pr.01.11 + Pr.01.17

The total Decel. Time=Pr.01.10 + Pr.01.18 or Pr.01.12 + Pr.01.18

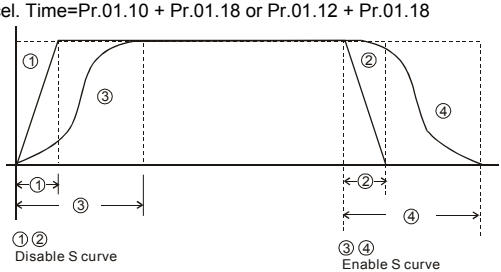

Acceleration/deceleration Characteristics

Group 2: Operation Method Parameters

02.00 Source of First Master Frequency Command

Factory Setting: 1

02.09 Source of Second Master Frequency Command

Factory Setting: 0

Settings	0	Digital keypad UP/DOWN keys or Multi-function Inputs UP/DOWN. Last used frequency saved. (Digital keypad is optional)
	1	0 to +10V from AVI
	2	4 to 20mA from ACI
	3	RS-485 (RJ-45) communication
	4	Digital keypad potentiometer

- These parameters set the Master Frequency Command Source of the AC motor drive.
- The factory setting for master frequency command is 1. (digital keypad is optional.)
- Setting 2: use the ACI/AVI switch on the AC motor drive to select ACI or AVI.

- When the AC motor drive is controlled by external terminal, please refer to Pr.02.05 for details.
- The first /second frequency/operation command is enabled/disabled by Multi Function Input Terminals. Please refer to Pr.04.05 ~ 04.08.

02.01 Source of First Operation Command

Factory Setting: 1

Settings	0	Digital keypad (Digital keypad is optional)
	1	External terminals. Keypad STOP/RESET enabled.
	2	External terminals. Keypad STOP/RESET disabled.
	3	RS-485 (RJ-45)/USB communication. Keypad STOP/RESET enabled.
	4	RS-485 (RJ-45)/USB communication. Keypad STOP/RESET disabled.

- The factory setting for source of first operation command is 1. (digital keypad is optional.)
- When the AC motor drive is controlled by external terminal, please refer to Pr.02.05/Pr.04.04 for details.

02.10	✓Combination of the First and Second Master Frequency Command

Factory Setting: 0

Settings	0	First Master Frequency Command Only
	1	First Master Frequency + Second Master Frequency
	2	First Master Frequency - Second Master Frequency

02.02	Stop Method

Factory Setting: 0

Settings	0	STOP: ramp to stop	E.F.: coast to stop
	1	STOP: coast to stop	E.F.: coast to stop
	2	STOP: ramp to stop	E.F.: ramp to stop
	3	STOP: coast to stop	E.F.: ramp to stop

🕮 The parameter determines how the motor is stopped when the AC motor drive receives a valid stop command or detects External Fault.

Ramp: the AC motor drive decelerates to Minimum Output Frequency (Pr.01.05) according to the deceleration time and then stops.

Coast: the AC motor drive stops the output instantly upon command, and the motor free runs until it comes to a complete standstill.

The motor stop method is usually determined by the characteristics of the motor load and how frequently it is stopped.

(1) It is recommended to use “ramp to stop” for safety of personnel or to prevent material from being wasted in applications where the motor has to stop after the drive is stopped. The deceleration time has to be set accordingly.

(2) If motor free running is allowed or the load inertia is large, it is recommended to select “coast to stop”. For example: blowers, punching machines, centrifuges and pumps.

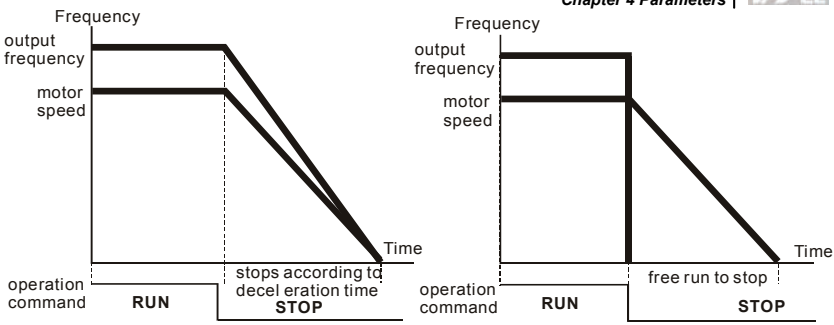

ramp to stop and free run to stop

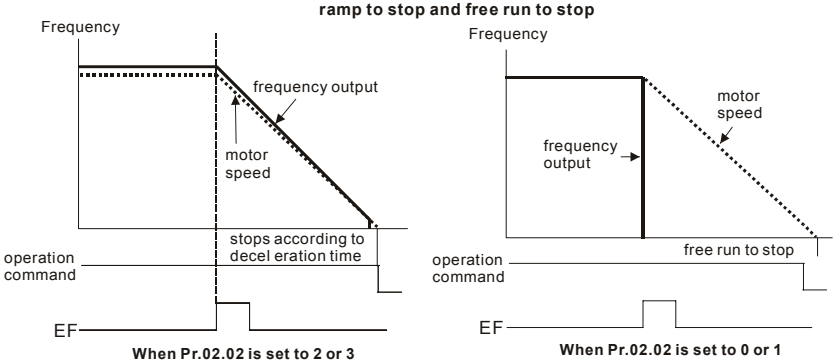

02.03 PWM Carrier Frequency Selections Unit: 1

115V/230V/460V Series	
Power	0.25 to 5hp (0.2kW to 3.7kW)
Setting Range	2 to 12 kHz
Factory Setting	8 kHz

This parameter determines the PWM carrier frequency of the AC motor drive.

Carrier Frequency	Acoustic Noise	Electromagnetic Noise or leakage current	Heat Dissipation	Current Wave
2kHz	Significant	Minimal	Minimal	Minimal
8kHz	↕	↕	↕	↕
12kHz	Minimal	Significant	Significant	Significant

- From the table, we see that the PWM carrier frequency has a significant influence on the electromagnetic noise, AC motor drive heat dissipation, and motor acoustic noise.
- The PWM carrier frequency will be decreased automatically by the ambient temperature and output current of the AC motor drives. It is used to prevent AC motor drive overheat and extend IGBT's life. Therefore, it is necessary to have this kind of protection method. Take an example of 460V models, assume that the carrier frequency is 12kHz, ambient temperature is 50 degrees C with single AC motor drive. If the output current exceeds 80% * rated current, the AC motor drive will decrease the carrier frequency automatically by the following chart. If output current is around 100% * rated current, the carrier frequency will decrease from 12k Hz to 8k Hz.

Mounting method

Method A

Frame A

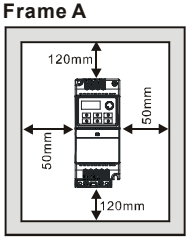

Frame B

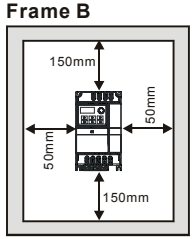

Method B

Frame A

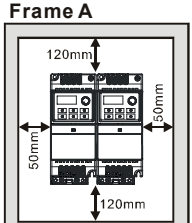

Frame B

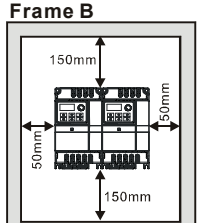

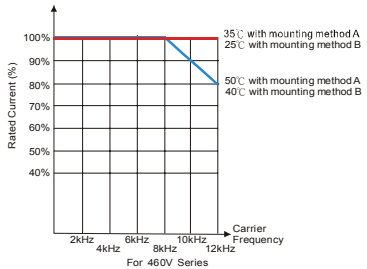

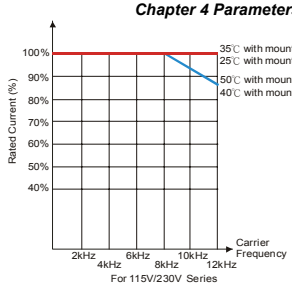

02.04 Motor Direction Control

Factory Setting: 0

Settings		
	0	Forward/Reverse operation enabled
	1	Reverse operation disabled
	2	Forward operation disabled

This parameter is used to disable one direction of rotation of the AC motor drive direction of rotation.

02.05 Line Start Lockout

Factory Setting: 1

Settings		
	0	Disable. Operation status is not changed even if operation command source Pr.02.01 is changed.
	1	Enable. Operation status is not changed even if operation command source Pr.02.01 is changed.
	2	Disable. Operation status will change if operation command source Pr.02.01 is changed.
	3	Enable. Operation status will change if operation command source Pr.02.01 is changed.

This parameter determines the response of the drive upon power on and operation command source is changed.

Pr.02.05	Start lockout (Run when power is ON)	Operation status when operation command source is changed
0	Disable (AC motor drive will run)	Keep previous status
1	Enable (AC motor drive doesn't run)	Keep previous status
2	Disable (AC motor drive will run)	Change according to the new operation command source
3	Enable (AC motor drive doesn't run)	Change according to the new operation command source

When the operation command source is from external terminal and operation command is ON (MI1/MI2-DCM=closed), the AC motor drive will operate according to Pr.02.05 after power is applied. **<For terminals MI1 and MI2 only>**

1. When Pr.02.05 is set to 0 or 2, AC motor drive will run immediately.
2. When Pr.02.05 is set to 1 or 3, AC motor drive will remain stopped until operation command is received after previous operation command is cancelled.

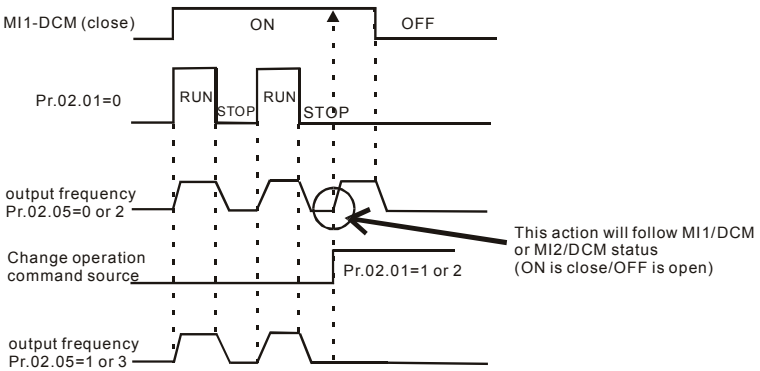

When the operation command source isn't from the external terminals, independently from whether the AC motor drive runs or stops, the AC motor drive will operate according to Pr.02.05 if the two conditions below are both met.

1. When operation command source is changed to external terminal (Pr.02.01=1 or 2)
2. The status of terminal and AC motor drive is different.

And the operation of the AC motor drive will be:

1. When setting 0 or 1, the status of AC motor drive is not changed by the terminal status.
2. When setting 2 or 3, the status of AC motor drive is changed by the terminal status.

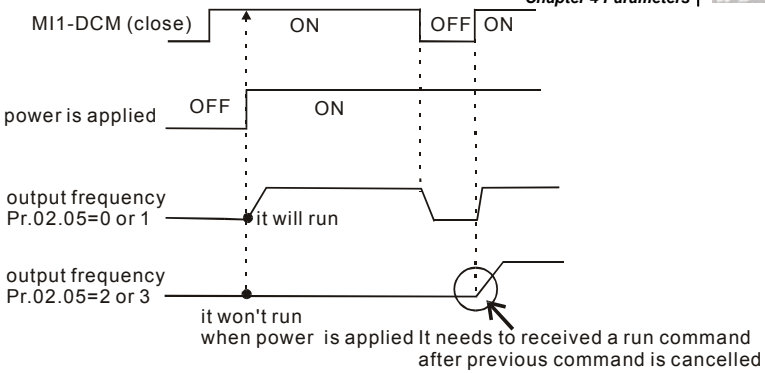

The Line Start Lockout feature does not guarantee that the motor will never start under this condition. It is possible the motor may be set in motion by a malfunctioning switch.

02.06	Loss of ACI Signal (4-20mA)	
		Factory Setting: 0
Settings	0	Decelerate to 0Hz
	1	Coast to stop and display "AErr"
	2	Continue operation by the last frequency command

- This parameter determines the behavior when ACI is lost.
- When set to 1, it will display warning message "AErr" on the keypad in case of loss of ACI signal and execute the setting. When ACI signal is recovered, the warning message will stop blinking. Please press "RESET" key to clear it.

02.07	Up/Down Mode	
		Factory Setting: 0
Settings	0	By digital keypad up/down keys mode
	1	Based on Accel/Decel Time acc. to Pr.01.09 to 01.12
	2	Constant speed (acc. to Pr. 02.08)
	3	Pulse input unit (acc. to Pr. 02.08)

02.08	Accel/Decel Rate of Change of UP/DOWN Operation with Constant Speed	Unit: 0.01
Settings	0.01~10.00 Hz/2ms	Factory Setting: 0.01

- These parameters determine the increase/decrease of the master frequency when operated via the Multi-function Inputs when Pr.04.05~Pr.04.08 are set to 10 (Up command) or 11 (Down command).
- When Pr.02.07 is set to 0: increase/decrease the frequency by using UP/DOWN key. It is valid only when the AC motor drive is running.
- When Pr.02.07 is set to 1: increase/decrease the frequency by acceleration/deceleration settings. It is valid only when the AC motor drive is running.
- When Pr.02.07 is set to 2: increase/decrease the frequency by Pr.02.08.
- When Pr.02.07 is set to 3: increase/decrease the frequency by Pr.02.08 (unit: pulse input).

02.11	✓Keypad Frequency Command	Unit: 0.01
Settings	0.00 to 600.0Hz	Factory Setting: 60.00

- This parameter can be used to set frequency command or read keypad frequency command.

02.12	✓Communication Frequency Command	Unit: 0.01
Settings	0.00 to 600.0Hz	Factory Setting: 60.00

- This parameter can be used to set frequency command or read communication frequency command.

02.13	The Selections for Saving Keypad or Communication Frequency Command	
		Factory Setting: 0
Settings	0	Save Keypad & Communication Frequency
	1	Save Keypad Frequency only
	2	Save Communication Frequency only

- This parameter is used to save keypad or RS-485 frequency command.

02.14	Initial Frequency Selection (for keypad & RS485)	
		Factory Setting: 0
Settings	0	By Current Freq Command
	1	By Zero Freq Command
	2	By Frequency Display at Stop

02.15	Initial Frequency Setpoint (for keypad & RS485)	Unit: 0.01
Settings	0.00 ~ 600.0Hz	Factory Setting: 60.00

These parameters are used to determinate the frequency at stop:

When setting Pr.02.14 to 0: the initial frequency will be current frequency.

When setting Pr.02.14 to 1: the initial frequency will be 0.

When setting Pr.02.14 to 2: the initial frequency will be Pr.02.15.

02.16 Display the Master Freq Command Source

Settings Read Only Factory setting: ##

You can read the master frequency command source by this parameter.

Display Value	Bit	Function
1	Bit0=1	Master Freq Command Source by First Freq Source (Pr.02.00).
2	Bit1=1	Master Freq Command Source by Second Freq Source (Pr.02.09).
4	Bit2=1	Master Freq Command Source by Multi-input function

02.17 Display the Operation Command Source

Settings Read Only Factory setting: ##

You can read the operation source by this parameter.

Display Value	Bit	Function
1	Bit0=1	Operation Command Source by Digital Keypad
2	Bit1=1	Operation Command Source by RS485 communication
4	Bit2=1	Operation Command Source by External Terminal
8	Bit3=1	Operation Command Source by Multi-input function

02.18 User-defined Value 2 Setting Unit: 1

Settings 0 to Pr.00.13 Factory Setting: 0

Use this parameter to change frequency when (1) Pr.00.13 is not set to 0 and frequency source is from communication or (2) Pr.02.10 is not set to 0.

02.19	User-defined Value 2	Unit: 1
	Settings Read-only	Factory Setting: 0

For example: suppose that the frequency source is the first master frequency + second master frequency command (first master frequency is from keypad and second master frequency is from AVI), user-defined value 1 is set to 180.0(Pr.00.13 is set to 1800, Pr.00.14 is set to 1).
AVI=2V=180.0/(2V/10V)=36.0, frequency is 36.0/(180.0/60.0)=12.0Hz
Pr.02.18=30.0, frequency is 30.0/(60.0/180.0)=10.0Hz
At this moment, the keypad will display 66.0(36.0+30.0) and the output frequency is 22.0Hz(12.0+10.0). When reading the value from communication address, the value will be shown as follows: 2102H and 2103H are 22.0Hz, 0212H(Pr.02.18) is 30.0, 0213H(Pr.02.19) is 66.0.

Group 3: Output Function Parameters

03.00	Multi-function Output Relay (RA1, RB1, RC1)

Factory Setting: 8

Settings	Function	Description
0	No Function	
1	AC Drive Operational	Active when the drive is ready or RUN command is “ON”.
2	Master Frequency Attained	Active when the AC motor drive reaches the output frequency setting.
3	Zero Speed	Active when Command Frequency is lower than the Minimum Output Frequency.
4	Over-Torque Detection	Active as long as over-torque is detected. (Refer to Pr.06.03 ~ Pr.06.05)
5	Baseblock (B.B.) Indication	Active when the output of the AC motor drive is shut off during baseblock. Base block can be forced by Multi-function input (setting 09).
6	Low-Voltage Indication	Active when low voltage(Lv) is detected.
7	Operation Mode Indication	Active when operation command is controlled by external terminal.
8	Fault Indication	Active when a fault occurs (oc, ov, oH1, oL, oL1, EF, cF3, HPF, ocA, ocd, ocn, GFF).
9	Desired Frequency Attained	Active when the desired frequency (Pr.03.02) is attained.
10	Terminal Count Value Attained	Active when the counter reaches Terminal Count Value.
11	Preliminary Count Value Attained	Active when the counter reaches Preliminary Count Value.
12	Over Voltage Stall supervision	Active when the Over Voltage Stall function operating
13	Over Current Stall supervision	Active when the Over Current Stall function operating

Settings	Function	Description
14	Heat Sink Overheat Warning	When heatsink overheats, it will signal to prevent OH turn off the drive. When it is higher than 85°C (185°F), it will be ON.
15	Over Voltage supervision	Active when the DC-BUS voltage exceeds level
16	PID supervision	Active when the PID feedback signal is abnormal (Refer to Pr.10.12 and Pr.13.)
17	Forward command	Active when the direction command is FWD
18	Reverse command	Active when the direction command is REV
19	Zero Speed Output Signal	Active when the drive is standby or stop
20	Communication Warning (FbE,Cexx, AoL2, AUE, SAvE)	Active when there is a Communication Warning
21	Brake Control (Desired Frequency Attained)	Active when output frequency ≥Pr.03.11. Deactivated when output frequency ≤Pr.03.12 after STOP command.
22	AC Motor Drive Ready	Active when AC motor drive is ready.

03.01 Reserved

03.02 Desired Frequency Attained Unit: 0.01

Settings 0.00 to 600.0 Hz Factory Setting: 0.00

🕮 If a multi-function output terminal is set to function as Desired Frequency Attained (Pr.03.00 =09), then the output will be activated when the programmed frequency is attained.

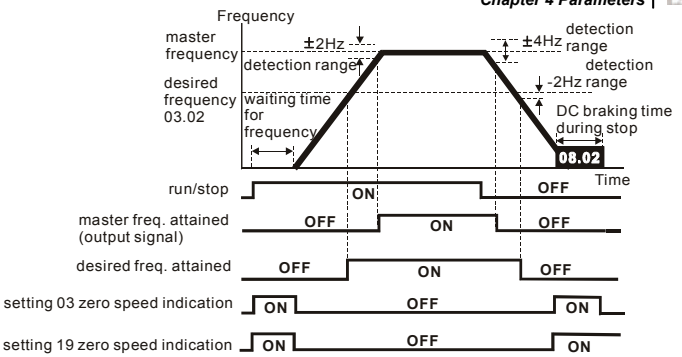

output timing chart of multiple function terminals when setting to frequency attained or zero speed indication

03.03	Analog Output Signal (AFM)	
		Factory Setting: 0
Settings	0	Analog Frequency Meter (0 to Maximum Output Frequency)
	1	Analog Current Meter (0 to 250% of rated AC motor drive current)

This parameter sets the function of the AFM output 0~+10VDC (ACM is common).

03.04	Analog Output Gain	Unit: 1
Settings	1 to 200%	Factory Setting: 100

This parameter sets the voltage range of the analog output signal AFM.

When Pr.03.03 is set to 0, the analog output voltage is directly proportional to the output frequency of the AC motor drive. With Pr.03.04 set to 100%, the Maximum Output Frequency (Pr.01.00) of the AC motor drive corresponds to +10VDC on the AFM output.

Similarly, if Pr.03.03 is set to 1, the analog output voltage is directly proportional to the output current of the AC drive. With Pr.03.04 set to 100%, then 2.5 times the rated current corresponds to +10VDC on the AFM output.

NOTE

Any type of voltmeter can be used. If the meter reads full scale at a voltage less than 10V, Pr. 03.04 should be set using the following formula:

Pr. 03.04 = ((meter full scale voltage)/10) x 100%

For Example: When using the meter with full scale of 5 volts, adjust Pr.03.04 to 50%. If Pr.03.03 is set to 0, then 5VDC will correspond to Maximum Output Frequency.

03.05	Terminal Count Value	Unit: 1
	Settings 0 to 9999	Factory Setting: 0

- This parameter sets the count value of the internal counter. To increase the internal counter, one of Pr.04.05 to 04.08 should be set to 12. Upon completion of counting, the specified output terminal will be activated. (Pr.03.00 set to 10).
- When the display shows c555, the drive has counted 555 times. If display shows c555•, it means that real counter value is between 5,550 and 5,559.

03.06	Preliminary Count Value	Unit: 1
	Settings 0 to 9999	Factory Setting: 0

- When the counter value reaches this value, the corresponding multi-function output terminal will be activated, provided one of Pr.03.00set to 11 (Preliminary Count Value Setting). This multi-function output terminal will be deactivated upon completion of Terminal Count Value Attained.
- The timing diagram:

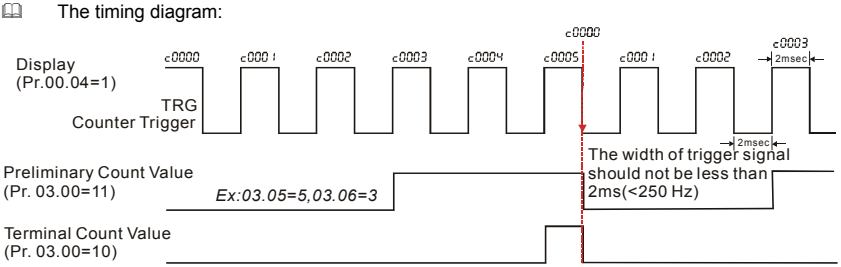

03.07	EF Active when Terminal Count Value Attained	
		Factory Setting: 0
	Settings 0	Terminal count value attained, no EF display
	1	Terminal count value attained, EF active

- If this parameter is set to 1 and the desired value of counter is attained, the AC drive will treat it as a fault. The drive will stop and show the “EF” message on the display.

03.08	Fan Control	
		Factory Setting: 0
Settings	0	Fan always ON
	1	1 minute after AC motor drive stops, fan will be OFF
	2	Fan ON when AC motor drive runs, fan OFF when AC motor drive stops
	3	Fan ON when preliminary heatsink temperature attained

This parameter determines the operation mode of the cooling fan.

03.09	Reserved

03.10	Reserved

03.11	Brake Release Frequency	Unit: 0.01
Settings	0.00 to 600.0Hz	Factory Setting: 0.00
03.12	Brake Engage Frequency	Unit: 0.01
Settings	0.00 to 600.0Hz	Factory Setting: 0.00

These two parameters are used to set control of mechanical brake via the output terminals (Relay) when Pr.03.00is set to 21. Refer to the following example for details.

Example:

1. Case 1: Pr.03.12 ≥ Pr.03.11
2. Case 2: Pr.03.12 ≤ Pr.03.11

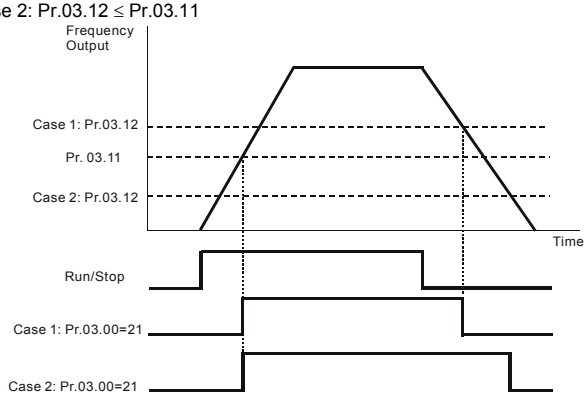

03.13	Display the Status of Relay	
	Settings Read Only	Factory setting: ##

- For standard AC motor drive, the multi-function output terminals are falling-edge triggered.
- 0: Relay is ON; 1: Relay is OFF.

Group 4: Input Function Parameters

04.00	✓Keypad Potentiometer Bias	Unit: 0. 1
	Settings 0.0 to 100.0%	Factory Setting: 0.0
04.01	✓Keypad Potentiometer Bias Polarity	
		Factory Setting: 0
	Settings 0 Positive Bias	
	1 Negative Bias	
04.02	✓Keypad Potentiometer Gain	Unit: 0.1
	Settings 0.1 to 200.0%	Factory Setting: 100.0
04.03	Keypad Potentiometer Negative Bias, Reverse Motion Enable/Disable	
		Factory Setting: 0
	Settings 0 No Negative Bias Command	
	1 Negative Bias: REV Motion Enabled	

Example 1: Standard application

This is the most used setting. The user only needs to set Pr.02.00 to 04. The frequency command comes from keypad potentiometer.

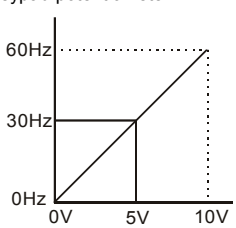

Pr.01.00=60Hz--Max. output Freq.
Potentiometer
Pr.04.00 =0%--Bias adjustment
Pr.04.01 =0--Positive bias
Pr.04.02 =100%--Input gain
Pr.04.03 =0--No negative bias command

Example 2: Use of bias

This example shows the influence of changing the bias. When the input is 0V the output frequency is 10 Hz. At mid-point a potentiometer will give 40 Hz. Once the Maximum Output Frequency is reached, any further increase of the potentiometer or signal will not increase the output frequency. (To use the full potentiometer range, please refer to Example 3.) The value of external input voltage/current 0-8.33V corresponds to the setting frequency 10-60Hz.

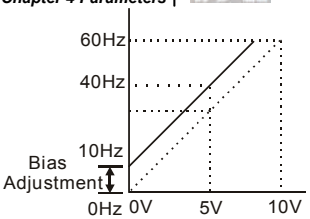

Pr.01.00=60Hz--Max. output Freq.
Potentiometer
Pr.04.00 =16.7%--Bias adjustment
Pr.04.01 =0--Positive bias
Pr.04.02 =100%--Input gain
Pr.04.03 =0--No negative bias command

Gain:100%

Bias adjustment:((10Hz/60Hz)/(Gain/100%))*100%=16.7%

Example 3: Use of bias and gain for use of full range

This example also shows a popular method. The whole scale of the potentiometer can be used as desired. In addition to signals of 0 to 10V, the popular voltage signals also include signals of 0 to 5V, or any value under 10V. Regarding the setting, please refer to the following examples.

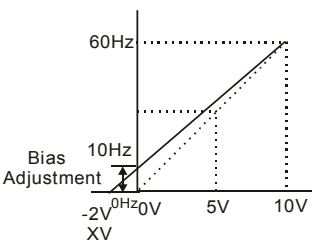

Pr.01.00=60Hz--Max. output Freq.
Potentiometer
Pr.04.00 =20.0%--Bias adjustment
Pr.04.01 =0--Positive bias
Pr.04.02 =83.3%--Input gain
Pr.04.03 =0--No negative bias command

Gain:(10V/(10V+2V))*100%=83.3%

Bias adjustment:((10Hz/60Hz)/(Gain/100%))*100%=20.0%

Example 4: Use of 0-5V potentiometer range via gain adjustment

This example shows a potentiometer range of 0 to 5 Volts. Instead of adjusting gain as example below, you can set Pr. 01.00 to 120Hz to achieve the same results.

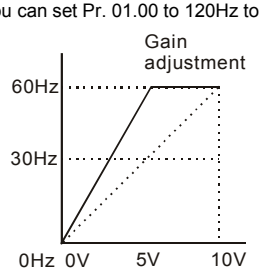

Pr.01.00=60Hz--Max. output Freq.
Potentiometer
Pr.04.00 =0.0%--Bias adjustment
Pr.04.01 =0--Positive bias
Pr.04.02 =200%--Input gain
Pr.04.03 =0--No negative bias command

Gain:(10V/5V)*100%=200%

Example 5: Use of negative bias in noisy environment

In this example, a 1V negative bias is used. In noisy environments it is advantageous to use negative bias to provide a noise margin (1V in this example).

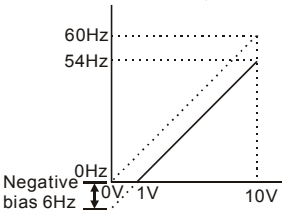

Pr.01.00=60Hz--Max. output Freq.
Potentiometer
Pr.04.00 =10.0%--Bias adjustment
Pr.04.01 =1--Negative bias
Pr.04.02 =100%--Input gain
Pr.04.03 =0--No negative bias command

Gain:100%

Bias adjustment:((6Hz/60Hz)/(Gain/100%))*100%=10.0%

Example 6: Use of negative bias in noisy environment and gain adjustment to use full potentiometer range

In this example, a negative bias is used to provide a noise margin. Also a potentiometer frequency gain is used to allow the Maximum Output Frequency to be reached.

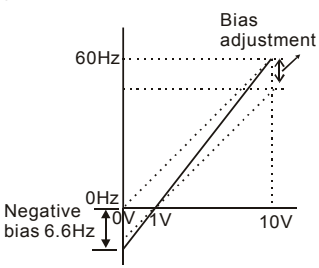

Pr.01.00=60Hz--Max. output Freq.
Potentiometer
Pr.04.00 =10.0%--Bias adjustment
Pr.04.01 =1--Negative bias
Pr.04.02 =111%--Input gain
Pr.04.03 =0--No negative bias command

Gain:(10V/9V)*100%=111%

Bias adjustment:((6.6Hz/60Hz)/(Gain/100%))*100%=10.0%

Example 7: Use of 0-10V potentiometer signal to run motor in FWD and REV direction

In this example, the input is programmed to run a motor in both forward and reverse direction. The motor will be idle when the potentiometer position is at mid-point of its scale. Using the settings in this example disables the external FWD and REV controls.

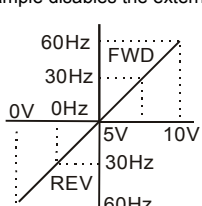

Pr.01.00=60Hz--Max. output Freq.
Potentiometer
Pr.04.00 =50.0%--Bias adjustment
Pr.04.01 =1--Negative bias
Pr.04.02 =200%--Input gain
Pr.04.03 =1--Negative bias: REV motion enabled

Gain:(10V/5V)*100%=200%

Bias adjustment:((60Hz/60Hz)/(Gain/100%))*100%=200%

Example 8: Use negative slope

In this example, the use of negative slope is shown. Negative slopes are used in applications for control of pressure, temperature or flow. The sensor that is connected to the input generates a large signal (10V) at high pressure or flow. With negative slope settings, the AC motor drive will slow stop the motor. With these settings the AC motor drive will always run in only one direction (reverse). This can only be changed by exchanging 2 wires to the motor.

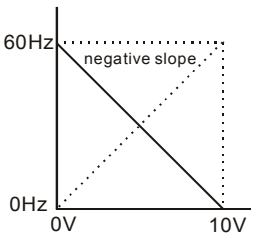

Pr.01.00=60Hz--Max. output Freq.
Potentiometer
Pr.04.00 =100%--Bias adjustment
Pr.04.01 =0--Positive bias
Pr.04.02 =100%--Input gain
Pr.04.03 =1--Negative bias: REV motion enabled

Gain:(10V/10V)*100%=100%

Bias adjustment:((60Hz/60Hz)/(Gain/100%))*100%=100%

04.11	Minimum AVI Voltage	Unit: 0.1
	Settings 0.0 to 10.0V	Factory Setting: 0.0
04.12	Minimum AVI Frequency (percentage of Pr.01.00)	Unit: 0.1
	Settings 0.0 to 100.0%	Factory Setting: 0.0
04.13	Maximum AVI Voltage	Unit: 0.1
	Settings 0.0 to 10.0V	Factory Setting: 10.0
04.14	Maximum AVI Frequency (percentage of Pr. 01.00)	Unit: 0.1
	Settings 0.0 to 100.0%	Factory Setting: 100.0
04.15	Minimum ACI Current	Unit: 0.1
	Settings 0.0 to 20.0mA	Factory Setting: 4.0
04.16	Minimum ACI Frequency (percentage of Pr. 01.00)	Unit: 0.1
	Settings 0.0 to 100.0%	Factory Setting: 0.0
04.17	Maximum ACI Current	Unit: 0.1
	Settings 0.0 to 20.0mA	Factory Setting: 20.0
04.18	Maximum ACI Frequency (percentage of Pr. 01.00)	Unit: 0.1
	Settings 0.0 to 100.0%	Factory Setting: 100.0

📖 The above parameters are used to set the analog input reference values. The min and max frequencies are based on Pr.01.00 (during open-loop control) as shown in the following.

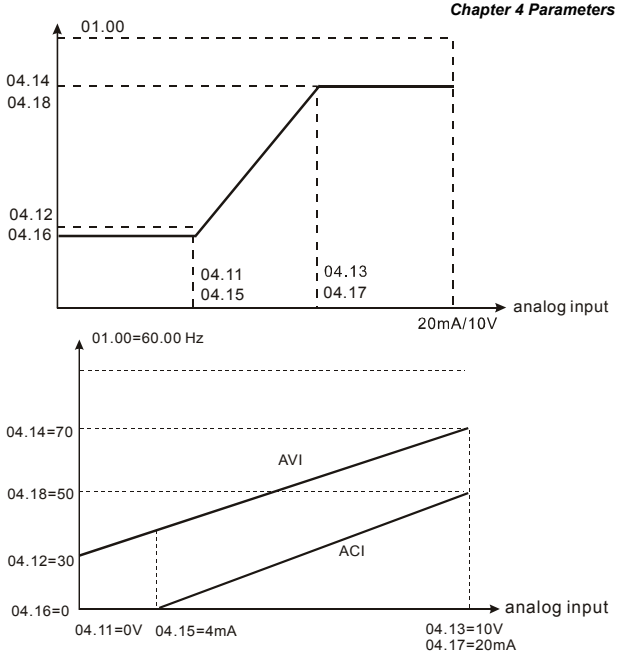

04.19	Reserved
04.20	Reserved
04.21	Reserved
04.22	Reserved
04.23	Reserved
04.24	Reserved
04.25	Reserved

04.04	Multi-function Input Terminal (MI1, MI2) 2-wire/ 3-wire Operation Control Modes

Factory Setting: 0

Settings
0 2-wire: FWD/STOP, REV/STOP
1 2-wire: FWD/REV, RUN/STOP
2 3-wire Operation

There are three different types of control modes:

04.04	External Terminal	
0	2-wire FWD /STOP REV / STOP	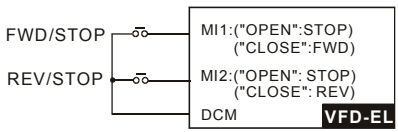
1	2-wire FWD/ REV RUN / STOP	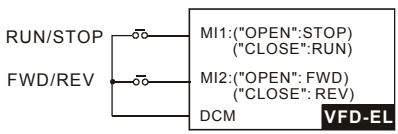
2	3-wire	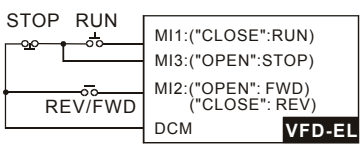

04.05	Multi-function Input Terminal (MI3)	Factory Setting: 1
04.06	Multi-function Input Terminal (MI4)	Factory Setting: 2
04.07	Multi-function Input Terminal (MI5)	Factory Setting: 3
04.08	Multi-function Input Terminal (MI6)	Factory Setting: 4

Settings	Function	Description
0	No Function	Any unused terminals should be programmed to 0 to insure they have no effect on operation.

Settings	Function	Description
1	Multi-Step Speed Command 1	These four inputs select the multi-speed defined by Pr.05.00 to Pr.05.14 as shown in the diagram at the end of this table. **NOTE: Pr.05.00 to Pr.05.14 can also be used to control output speed. There are 17 step speed frequencies (including Master Frequency and Jog Frequency) to select for application.**
2	Multi-Step Speed Command 2	
3	Multi-Step Speed Command 3	
4	Multi-Step Speed Command 4	
5	External Reset	The External Reset has the same function as the Reset key on the Digital keypad. After faults such as O.H., O.C. and O.V. are cleared this input can be used to reset the drive.
6	Accel/Decel Inhibit	When the command is active, acceleration and deceleration is stopped and the AC motor drive maintains a constant speed.
7	Accel/Decel Time Selection Command	Used to select the one of 2 Accel/Decel Times (Pr.01.09 to Pr.01.12). See explanation at the end of this table.
8	Jog Operation Control	Parameter value 08 programs one of the Multi-function Input Terminals MI3 ~ MI6 (Pr.04.05~Pr.04.08) for Jog control. **NOTE: Programming for Jog operation by 08 can only be done while the motor is stopped. (Refer to parameter Pr.01.13~Pr.01.15)**
9	External Base Block (Refer to Pr. 08.06)	Parameter value 09 programs a Multi-function Input Terminals for external Base Block control. **NOTE: When a Base-Block signal is received, the AC motor drive will block all output and the motor will free run. When base block control is deactivated, the AC drive will start its speed search function and synchronize with the motor speed, and then accelerate to Master Frequency.**

Settings	Function	Description
10	UP: Increase Master Frequency	Increase/decrease the Master Frequency each time an input is received or continuously when the input stays active. When both inputs are active at the same time, the Master Frequency increase/decrease is halted. Please refer to Pr.02.07, 02.08. This function is also called “motor potentiometer”.
11	DOWN: Decrease Master Frequency	
12	Counter Trigger	Parameter value 12 programs one of the Multi-function Input Terminals MI3~MI6 (Pr.04.05~Pr.04.08) to increment the AC drive’s internal counter. When an input is received, the counter is incremented by 1.
13	Counter Reset	When active, the counter is reset and inhibited. To enable counting the input should be OFF. Refer to Pr.03.05 and 03.06.
14	External Fault	Parameter value 14 programs one of the Multi-function Input Terminals MI3~MI6 (Pr.04.05~Pr.04.08) to be External Fault (E.F.) inputs.
15	PID function disabled	When an input ON with this setting is ON, the PID function will be disabled.
16	Output Shutoff Stop	AC motor drive will stop output and the motor free run if one of these settings is enabled. If the status of terminal is changed, AC motor drive will restart from 0Hz.
17	Parameter lock enable	When this setting is enabled, all parameters will be locked and write parameters is disabled.
18	Operation Command Selection (Pr.02.01 setting/external terminals)	ON: Operation command via Ext. Terminals OFF: Operation command via Pr.02.01 setting Pr.02.01 is disabled if this parameter value 18 is set. See the explanation below this table.
19	Operation Command Selection (Pr 02.01 setting/Digital Keypad)	ON: Operation command via Digital Keypad OFF: Operation command via Pr.02.01 setting Pr.02.01 is disabled if this parameter value 19 is set. See the explanation below this table.

Settings	Function	Description
20	Operation Command Selection (Pr 02.01 setting/ Communication)	ON: Operation command via Communication OFF: Operation command via Pr.02.01 setting Pr.02.01 is disabled if this parameter value 20 is set. See the explanation below this table.
21	Forward/Reverse	This function has top priority to set the direction for running (If "Pr.02.04=0")
22	Source of second frequency command enabled	Used to select the first/second frequency command source. Refer to Pr.02.00 and 02.09. ON: 2nd Frequency command source OFF: 1st Frequency command source

04.09	Multi-function Input Contact Selection	Unit: 1
	Settings 0 to 4095	Factory Setting: 0

- This parameter can be used to set the status of multi-function terminals (MI1~MI6 (N.O./N.C.) for standard AC motor drive).
- The MI1~MI3 setting will be invalid when the operation command source is external terminal (2/3wire).

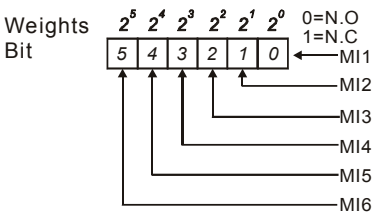

- The Setting method: It needs to convert binary number (6-bit) to decimal number for input.
- For example: if setting MI3, MI5, MI6 to be N.C. and MI1, MI2, MI4 to be N.O. The setting value Pr.04.09 should be bit5X2^5+bit4X2^4+bit2X2^2= 1X2^5+1X2^4+1X2^2= 32+16+4=52 as shown in the following.

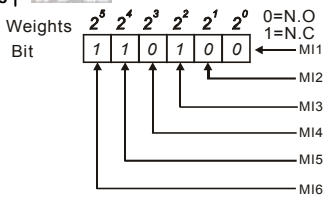

The setting value
$= bit5x2^5+bit4x2^4+bit2x2^2$
$= 1x2^5+1x2^4+1x2^2$
$=32+16+4 =52$
Setting 04.09

NOTE:
2^{14}=16384 2^{13}=8192 2^{12}=4096 2^{11}=2048 2^{10}=1024
2^9=512 2^8=256 2^7=128 2^6=64 2^5=32
2^4=16 2^3=8 2^2=4 2^1=2 2^0=1

04.10 Digital Terminal Input Debouncing Time Unit: 2 msec

Settings 1 to 20 Factory Setting: 1

This parameter is to delay the signals on digital input terminals. 1 unit is 2 msec, 2 units are 4 msec, etc. The delay time is to debounce noisy signals that could cause the digital terminals to malfunction.

04.26 Display the Status of Multi-function Input Terminal

Settings Read Only Factory setting: ##

Display Bit0: MI1 Status
Bit1: MI2 Status
Bit2: MI3 Status
Bit3: MI4 Status
Bit4: MI5 Status
Bit5: MI6 Status

The multi-function input terminals are falling-edge triggered. For standard AC motor drive, there are MI1 to MI6 and Pr.04.26 will display 63 (111111) for no action.

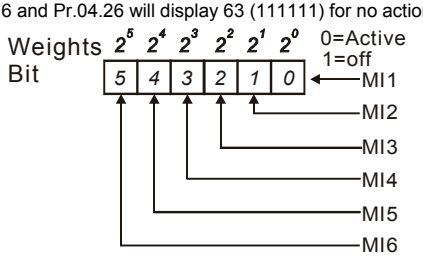

For Example:

If Pr.04.26 displays 52, it means MI1, MI2 and MI4 are active.

The display value 52= 32+16+4 =1 X 2^5+ 1X 2^4 + 1X 2^2 = bit 6 X 2^5+ bit 5 X 2^4 + bit 3 X 2^2

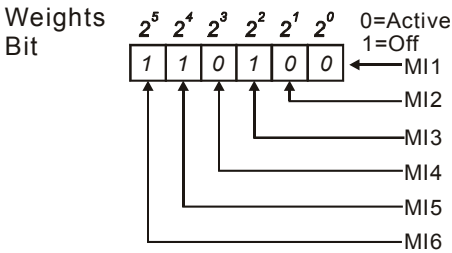

04.27	Internal/External Multi-function Input Terminals Selection	Unit: 1
Settings	0 to 4095	Factory Setting: 0

This parameter is used to select the terminals to be internal terminal or external terminal. You can activate internal terminals by Pr.04.28. A terminal cannot be both internal terminal and external terminal at the same time.

For standard AC motor drive, the multi-function input terminals are MI1 to MI6 as shown in the following.

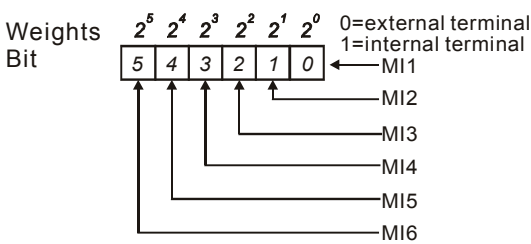

The Setting method is convert binary number to decimal number for input.

For example: if setting MI3, MI5, MI6 to be internal terminals and MI1, MI2, MI4 to be external terminals. The setting value should be bit5X2^5+bit4X2^4+bit2X2^2= 1X2^5+1X2^4+1X2^2= 32+16+4=52 as shown in the following.

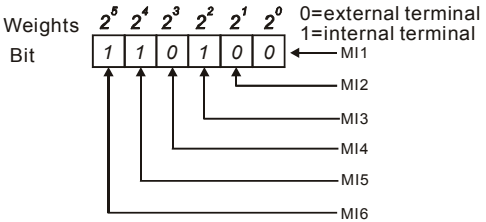

04.28	Internal Terminal Status	Unit: 1
	Settings 0 to 4095	Factory Setting: 0

This parameter is used to set the internal terminal action via keypad or communication.

For standard AC motor drive, the multi-function input terminals are MI1 to MI6 as shown in the following.

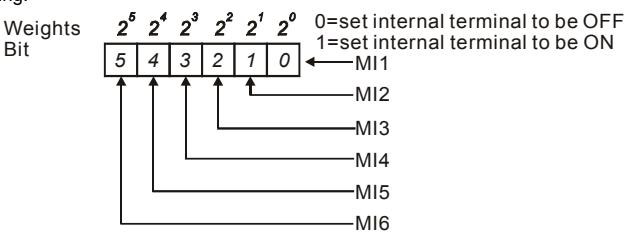

For example, if setting MI3, MI5 and MI6 to be ON, Pr.04.28 should be set to bit5X2^5+bit4X2^4+bit2X2^2= 1X2^5+1X2^4+1X2^2= 32+16+4=52 as shown in the following.

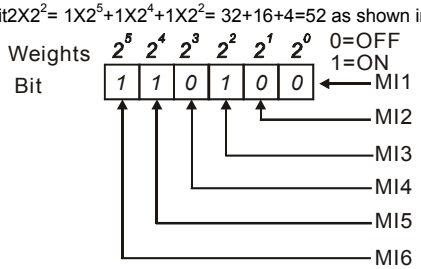

Group 5: Multi-step speeds parameters

05.00	✓1st Step Speed Frequency	Unit: 0.01
05.01	✓2nd Step Speed Frequency	Unit: 0.01
05.02	✓3rd Step Speed Frequency	Unit: 0.01
05.03	✓4th Step Speed Frequency	Unit: 0.01
05.04	✓5th Step Speed Frequency	Unit: 0.01
05.05	✓6th Step Speed Frequency	Unit: 0.01
05.06	✓7th Step Speed Frequency	Unit: 0.01
05.07	✓8th Step Speed Frequency	Unit: 0.01
05.08	✓9th Step Speed Frequency	Unit: 0.01
05.09	✓10th Step Speed Frequency	Unit: 0.01
05.10	✓11th Step Speed Frequency	Unit: 0.01
05.11	✓12th Step Speed Frequency	Unit: 0.01
05.12	✓13th Step Speed Frequency	Unit: 0.01
05.13	✓14th Step Speed Frequency	Unit: 0.01
05.14	✓15th Step Speed Frequency	Unit: 0.01
	Settings 0.00 to 600.0Hz	Factory Setting: 0.00

📖 The Multi-function Input Terminals (refer to Pr.04.05 to 04.08) are used to select one of the AC motor drive Multi-step speeds. The speeds (frequencies) are determined by Pr.05.00 to 05.14 as shown in the following.

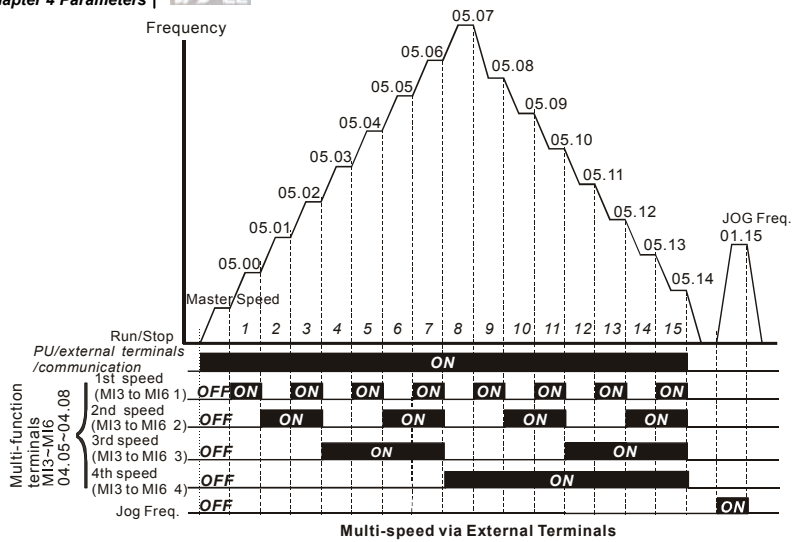

Multi-speed via External Terminals

	MI6=4	MI5=3	MI4=2	MI3=1
Master frequency	OFF	OFF	OFF	OFF
1st speed	OFF	OFF	OFF	ON
2nd speed	OFF	OFF	ON	OFF
3rd speed	OFF	OFF	ON	ON
4th speed	OFF	ON	OFF	OFF
5th speed	OFF	ON	OFF	ON
6th speed	OFF	ON	ON	OFF
7th speed	OFF	ON	ON	ON
8th speed	ON	OFF	OFF	OFF
9th speed	ON	OFF	OFF	ON
10th speed	ON	OFF	ON	OFF
11th speed	ON	OFF	ON	ON
12th speed	ON	ON	OFF	OFF
13th speed	ON	ON	OFF	ON
14th speed	ON	ON	ON	OFF
15th speed	ON	ON	ON	ON

Group 6: Protection Parameters

06.00	Over-Voltage Stall Prevention		Unit: 0.1
Settings	115V/230V series	330.0 to 410.0V	Factory Setting: 390.0
	460V series	660.0 to 820.0V	Factory Setting: 780.0
	0	Disable Over-voltage Stall Prevention (with brake unit or brake resistor)	

- During deceleration, the DC bus voltage may exceed its Maximum Allowable Value due to motor regeneration. When this function is enabled, the AC motor drive will not decelerate further and keep the output frequency constant until the voltage drops below the preset value again.
- Over-Voltage Stall Prevention must be disabled (Pr.06.00=0) when a brake unit or brake resistor is used.

NOTE

With moderate inertia load, over-voltage stall prevention will not occur and the real deceleration time will be equal to the setting of deceleration time. The AC drive will automatically extend the deceleration time with high inertia loads. If the deceleration time is critical for the application, a brake resistor or brake unit should be used.

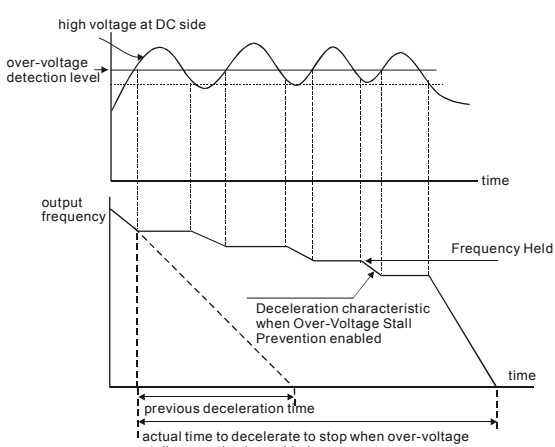

06.01	Over-Current Stall Prevention during Acceleration	Unit: 1
Settings	20 to 250%	Factory Setting: 170
	0: disable	

- A setting of 100% is equal to the Rated Output Current of the drive.
- During acceleration, the AC drive output current may increase abruptly and exceed the value specified by Pr.06.01 due to rapid acceleration or excessive load on the motor. When this function is enabled, the AC drive will stop accelerating and keep the output frequency constant until the current drops below the maximum value.

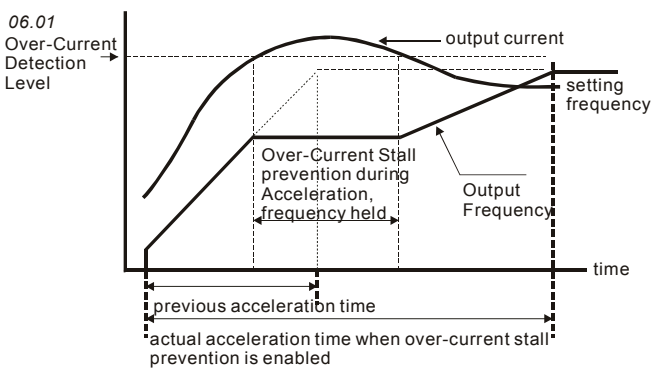

06.02	Over-current Stall Prevention during Operation	Unit: 1
Settings	20 to 250%	Factory Setting: 170
	0: disable	

- If the output current exceeds the setting specified in Pr.06.02 when the drive is operating, the drive will decrease its output frequency to prevent the motor stall. If the output current is lower than the setting specified in Pr.06.02, the drive will accelerate again to catch up with the set frequency command value.

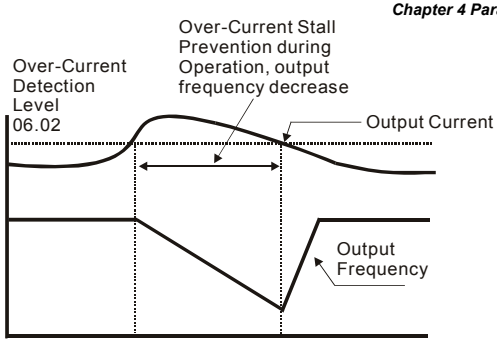

over-current stall prevention during operation

06.03	Over-Torque Detection Mode (OL2)	
		Factory Setting: 0
Settings	0	Over-Torque detection disabled.
	1	Over-Torque detection enabled during constant speed operation. After over-torque is detected, keep running until OL1 or OL occurs.
	2	Over-Torque detection enabled during constant speed operation. After over-torque is detected, stop running.
	3	Over-Torque detection enabled during acceleration. After over-torque is detected, keep running until OL1 or OL occurs.
	4	Over-Torque detection enabled during acceleration. After over-torque is detected, stop running.

This parameter determines the operation mode of the drive after the over-torque (OL2) is detected via the following method: if the output current exceeds the over-torque detection level (Pr.06.04) longer than the setting of Pr.06.05 Over-Torque Detection Time, the warning message “OL2” is displayed. If a Multi-functional Output Terminal is set to over-torque detection (Pr.03.00=04), the output is on. Please refer to Pr.03.00 for details.

06.04	✓Over-Torque Detection Level (OL2)	Unit: 1
	Settings 10 to 200%	Factory Setting: 150

This setting is proportional to the Rated Output Current of the drive.

06.05	Over-Torque Detection Time (OL2)	Unit: 0.1
	Settings 0.1 to 60.0 sec	Factory Setting: 0.1

This parameter sets the time for how long over-torque must be detected before “OL2” is displayed.

06.06	Electronic Thermal Overload Relay Selection (OL1)	
		Factory Setting: 2
Settings	0	Operate with a Standard Motor (self-cooled by fan)
	1	Operate with a Special Motor (forced external cooling)
	2	Operation disabled

This function is used to protect the motor from overloading or overheating.

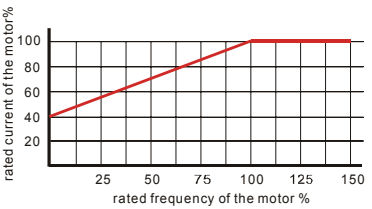

Standard motor
(self-cooled by fan)

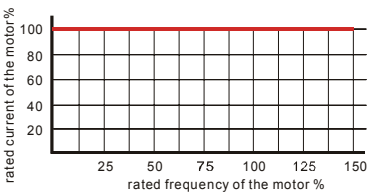

Special Motor
(forced external cooling)

06.07	Electronic Thermal Characteristic	Unit: 1
Settings	30 to 600 sec	Factory Setting: 60

The parameter determines the time required for activating the I^2t electronic thermal protection function. The graph below shows I^2t curves for 150% output power for 1 minute.

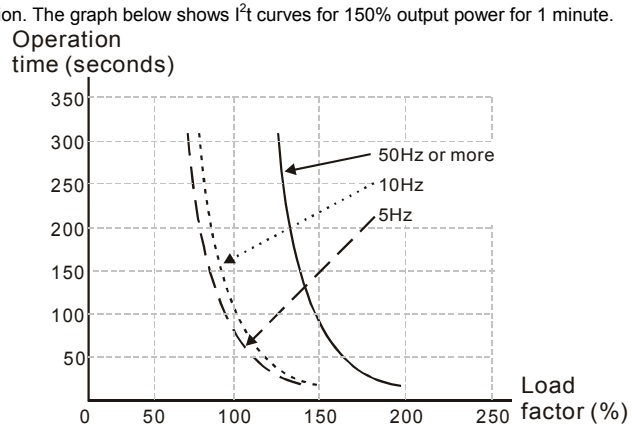

06.08	Present Fault Record
06.09	Second Most Recent Fault Record
06.10	Third Most Recent Fault Record
06.11	Fourth Most Recent Fault Record
06.12	Fifth Most Recent Fault Record

Factory Setting: 0

Readings	0	No fault
	1	Over-current (oc)
	2	Over-voltage (ov)
	3	IGBT Overheat (oH1)
	4	Reserved
	5	Overload(oL)
	6	Overload (oL1)
	7	Motor Overload (oL2)
	8	External Fault (EF)
	9	Hardware protection failure (HPF)
	10	Current exceeds 2 times rated current during accel.(ocA)
	11	Current exceeds 2 times rated current during decel.(ocd)
	12	Current exceeds 2 times rated current during steady state operation (ocn)
	13	Reserved
	14	Phase-loss (PHL)
	15	Reserved
	16	Auto accel/decel failure (CFA)
	17	Software/password protection (codE)
	18	Power Board CPU WRITE Failure (cF1.0)
	19	Power Board CPU READ Failure (cF2.0)
	20	CC, OC Hardware protection failure (HPF1)
	21	OV Hardware protection failure (HPF2)
	22	GFF Hardware protection failure (HPF3)
	23	OC Hardware protection failure (HPF4)
	24	U-phase error (cF3.0)
	25	V-phase error (cF3.1)
	26	W-phase error (cF3.2)
	27	DCBUS error (cF3.3)
	28	IGBT Overheat (cF3.4)

29-31	Reserved
32	ACI signal error (AErr)
33	Reserved
34	Motor PTC overheat protection (PtC1)
35-40	Reserved

🕮 In Pr.06.08 to Pr.06.12 the five most recent faults that occurred, are stored. After removing the cause of the fault, use the reset command to reset the drive.

Group 7: Motor Parameters

07.00	✓Motor Rated Current	Unit: 1
	Settings 30% FLA to 120% FLA	Factory Setting: FLA

📖 Use the following formula to calculate the percentage value entered in this parameter:

(Motor Current / AC Drive Current) x 100%

with Motor Current=Motor rated current in A on type shield

AC Drive Current=Rated current of AC drive in A (see Pr.00.01)

07.01	✓Motor No-load Current	Unit: 1
	Settings 0% FLA to 90% FLA	Factory Setting: 0.4*FLA

📖 The rated current of the AC drive is regarded as 100%. The setting of the Motor no-load current will affect the slip compensation.

📖 The setting value must be less than Pr.07.00 (Motor Rated Current).

07.02	✓Torque Compensation	Unit: 0.1
	Settings 0.0 to 10.0	Factory Setting: 0.0

📖 This parameter may be set so that the AC drive will increase its voltage output to obtain a higher torque.

📖 Too high torque compensation can overheat the motor.

07.03	✓Slip Compensation	Unit: 0.01
	Settings 0.00 to 10.00	Factory Setting: 0.00

📖 While driving an asynchronous motor, increasing the load on the AC motor drive will cause an increase in slip and decrease in speed. This parameter may be used to compensate the slip by increasing the output frequency. When the output current of the AC motor drive is bigger than the motor no-load current (Pr.07.01), the AC drive will adjust its output frequency according to this parameter.

07.04	Reserved
07.05	Reserved
07.06	Reserved
07.07	Reserved
07.08	Reserved

07.09	Reserved	

07.10	Accumulative Motor Operation Time (Min.)	Unit: 1
	Settings 0~1439	Factory Setting: 0
07.11	Accumulative Motor Operation Time (Day)	Unit: 1
	Settings 0 ~65535	Factory Setting: 0

🕮 Pr.07.10 and Pr.07.11 are used to record the motor operation time. They can be cleared by setting to 0 and time is less than 1 minute is not recorded.

07.12	Motor PTC Overheat Protection	Unit: 1
		Factory Setting: 0
	Settings 0 Disable	
	1 Enable	
07.14	Motor PTC Overheat Protection Level	Unit: 0.1
	Settings 0.1~10.0V	Factory Setting: 2.4

🕮 When the motor is running at low frequency for a long time, the cooling function of the motor fan will be lower. To prevent overheating, it needs to have a Positive Temperature Coefficient thermoistor on the motor and connect its output signal to the drive's corresponding control terminals.

🕮 When the source of first/second frequency command is set to AVI (02.00=1/02.09=1), it will disable the function of motor PTC overheat protection (i.e. Pr.07.12 cannot be set to 1).

🕮 If temperature exceeds the setting level, motor will be coast to stop and PtC 1 is displayed. When the temperature decreases below the level of (Pr.07.15-Pr.07.16) and PtC 1 stops blinking, you can press RESET key to clear the fault.

🕮 Pr.07.14 (overheat protection level) must exceed Pr.07.15 (overheat warning level).

🕮 The PTC uses the AVI-input and is connected via resistor-divider as shown below.

1. The voltage between +10V to ACM: lies within 10.4V~11.2V.
2. The impedance for AVI is around 47kΩ.
3. Recommended value for resistor-divider R1 is 1~10kΩ.
4. Please contact your motor dealer for the curve of temperature and resistance value for PTC.

Call 1(800)985-6929 for Sales deltaacdrives.com sales@deltaacdrives.com

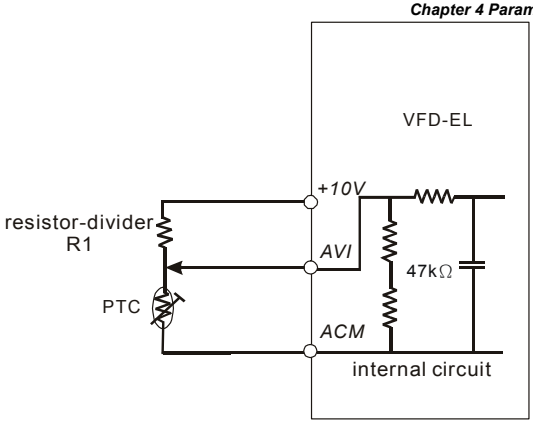

Refer to following calculation for protection level and warning level.

1. Protection level

   $Pr.07.14 = V_{+10} * (R_{PTC1}//47K) / [R1+(R_{PTC1}//47K)]$

2. Warning level

   $Pr.07.16 = V_{+10} * (R_{PTC2}//47K) / [R1+(R_{PTC2}//47K)]$

3. Definition:

   V+10: voltage between +10V-ACM, Range 10.4~11.2VDC

   R_{PTC1}: motor PTC overheat protection level. Corresponding voltage level set in Pr.07.14,

   R_{PTC2}: motor PTC overheat warning level. Corresponding voltage level set in Pr.07.15,

   47kΩ: is AVI input impedance, R1: resistor-divider (recommended value: 1~20kΩ)

Take the standard PTC thermistor as example: if protection level is 1330Ω, the voltage between +10V-ACM is 10.5V and resistor-divider R1 is 4.4kΩ. Refer to following calculation for Pr.07.14 setting.

1330//47000=(1330*47000)/(1330+47000)=1293.4

10.5*1293.4/(4400+1293.4)=2.38(V) ≒2.4(V)

Therefore, Pr.07.14 should be set to 2.4.

Call 1(800)985-6929 for Sales deltaacdrives.com sales@deltaacdrives.com

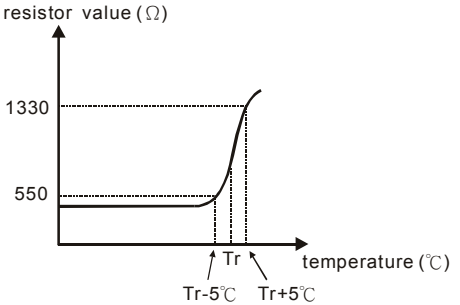

07.15	Motor PTC Overheat Warning Level	Unit: 0.1
	Settings 0.1~10.0V	Factory Setting: 1.2
07.16	Motor PTC Overheat Reset Delta Level	Unit: 0.1
	Settings 0.1~5.0V	Factory Setting: 0.6
07.17	Treatment of the motor PTC Overheat	
		Factory Setting: 0
	Settings 0 Warn and RAMP to stop	
	1 Warn and COAST to stop	
	2 Warn and keep running	

🕮 If temperature exceeds the motor PTC overheat warning level (Pr.07.15), the drive will act according to Pr.07.17 and display PtC2. If the temperature decreases below the result (Pr.07.15 minus Pr.07.16), the warning display will disappear.

07.13	Input Debouncing Time of the PTC Protection	Unit: 2ms
	Settings 0~9999 (is 0-19998ms)	Factory Setting: 100

🕮 This parameter is to delay the signals on PTC analog input terminals. 1 unit is 2 msec, 2 units are 4 msec, etc.

Group 8: Special Parameters

08.00	DC Brake Current Level	Unit: 1
	Settings 0 to 100%	Factory Setting: 0

This parameter sets the level of DC Brake Current output to the motor during start-up and stopping. When setting DC Brake Current, the Rated Current (Pr.00.01) is regarded as 100%. It is recommended to start with a low DC Brake Current Level and then increase until proper holding torque has been achieved.

08.01	DC Brake Time during Start-up	Unit: 0.1
	Settings 0.0 to 60.0 sec	Factory Setting: 0.0

This parameter determines the duration of the DC Brake current after a RUN command. When the time has elapsed, the AC motor drive will start accelerating from the Minimum Frequency (Pr.01.05).

08.02	DC Brake Time during Stopping	Unit: 0.1
	Settings 0.0 to 60.0 sec	Factory Setting: 0.0

This parameter determines the duration of the DC Brake current during stopping. If stopping with DC Brake is desired, Pr.02.02 Stop Method must be set to 0 or 2 for Ramp to Stop.

08.03	Start-Point for DC Brake	Unit: 0.01
	Settings 0.00 to 600.0Hz	Factory Setting: 0.00

This parameter determines the frequency when DC Brake will begin during deceleration.

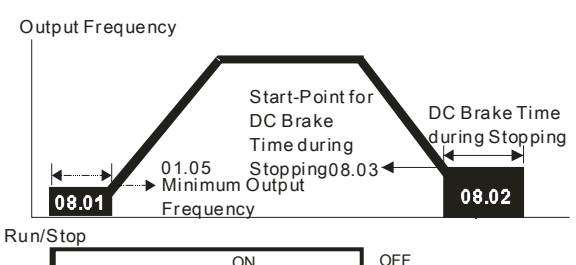

DC Brake Time

DC Brake during Start-up is used for loads that may move before the AC drive starts, such as fans and pumps. Under such circumstances, DC Brake can be used to hold the load in position before setting it in motion.

DC Brake during stopping is used to shorten the stopping time and also to hold a stopped load in position. For high inertia loads, a brake resistor for dynamic brake may also be needed for fast decelerations.

08.04 Momentary Power Loss Operation Selection

Factory Setting: 0

Settings	0	Operation stops (coast to stop) after momentary power loss.
	1	Operation continues after momentary power loss, speed search starts with the Master Frequency reference value.
	2	Operation continues after momentary power loss, speed search starts with the minimum frequency.

This parameter determines the operation mode when the AC motor drive restarts from a momentary power loss.

08.05 Maximum Allowable Power Loss Time Unit: 0.1

Settings 0.1 to 5.0 sec Factory Setting: 2.0

If the duration of a power loss is less than this parameter setting, the AC motor drive will resume operation. If it exceeds the Maximum Allowable Power Loss Time, the AC motor drive output is then turned off (coast stop).

The selected operation after power loss in Pr.08.04 is only executed when the maximum allowable power loss time is ≤5 seconds and the AC motor drive displays “Lu”.
But if the AC motor drive is powered off due to overload, even if the maximum allowable power loss time is ≤5 seconds, the operation mode as set in Pr.08.04 is not executed. In that case it starts up normally.

08.06 Base Block Speed Search

Factory Setting: 1

Settings	0	Disable
	1	Speed search starts with last frequency command
	2	Speed search starts with minimum output frequency (Pr.01.05)

This parameter determines the AC motor drive restart method after External Base Block is enabled.

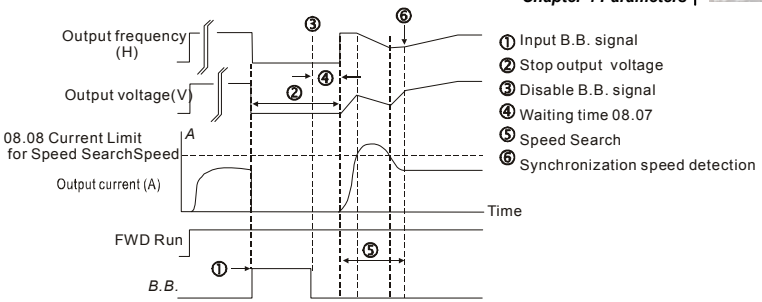

Fig 1:B.B. Speed Search with Last Output Frequency Downward Timing Chart
(Speed Search Current Attains Speed Search Level)

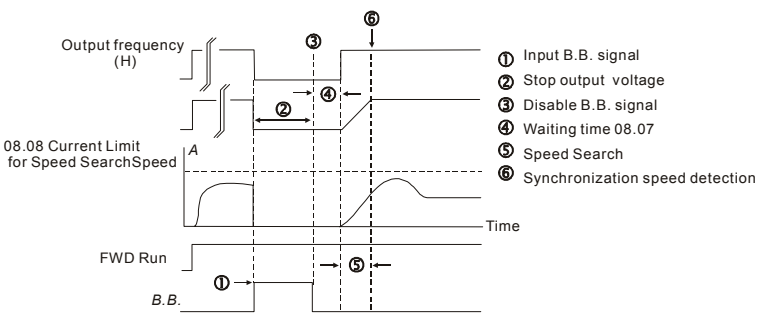

Fig 2: B.B. Speed Search with Last Output Frequency Downward Timing Chart
(Speed Search Current doesn't Attain Speed Search Level)

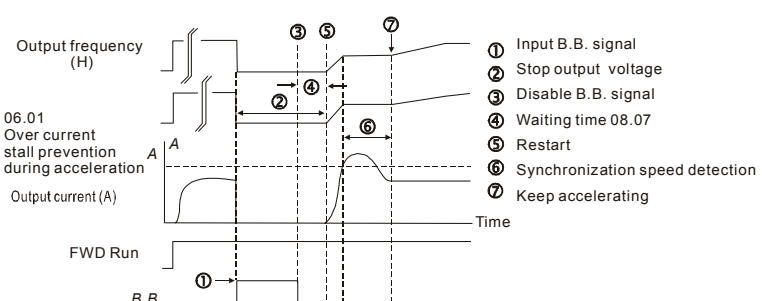

Fig3: B.B. Speed Search with Minimum Output Frequency Upward Timing Chart

08.07	Baseblock Time for Speed Search (BB)	Unit: 0.1
	Settings 0.1 to 5.0 sec	Factory Setting: 0.5

When momentary power loss is detected, the AC motor drive will block its output and then wait for a specified period of time (determined by Pr.08.07, called Base-Block Time) before resuming operation. This parameter should be set at a value to ensure that any residual regeneration voltage from the motor on the output has disappeared before the drive is activated again.

This parameter also determines the waiting time before resuming operation after External Baseblock and Auto Restart after Fault (Pr.08.15).

08.08	Current Limit for Speed Search	Unit: 1
	Settings 30 to 200%	Factory Setting: 150

Following a momentary power loss, the AC motor drive will start its speed search operation only if the output current is greater than the value set by Pr.08.08. When the output current is less than the value of Pr.08.08, the AC motor drive output frequency is at "speed synchronization point". The drive will start to accelerate or decelerate back to the operating frequency at which it was running prior to the power loss.

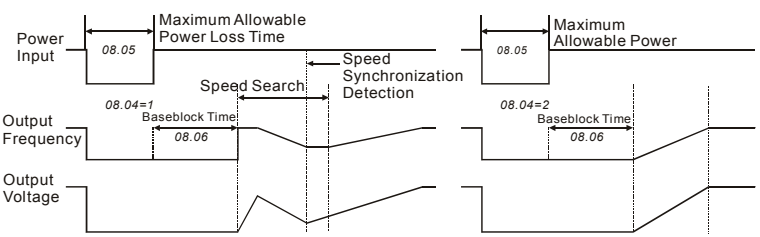

Momentary Power Loss Operation

08.09	Skip Frequency 1 Upper Limit	Unit: 0.01
08.10	Skip Frequency 1 Lower Limit	Unit: 0.01
08.11	Skip Frequency 2 Upper Limit	Unit: 0.01
08.12	Skip Frequency 2 Lower Limit	Unit: 0.01
08.13	Skip Frequency 3 Upper Limit	Unit: 0.01
08.14	Skip Frequency 3 Lower Limit	Unit: 0.01
	Settings 0.00 to 600.0Hz	Factory Setting: 0.00

- These parameters set the Skip Frequencies. It will cause the AC motor drive never to remain within these frequency ranges with continuous frequency output.
- These six parameters should be set as follows Pr.08.09 ≥ Pr.08.10 ≥ Pr.08.11 ≥ Pr.08.12 ≥ Pr.08.13 ≥ Pr.08.14.
- The frequency ranges may be overlapping.

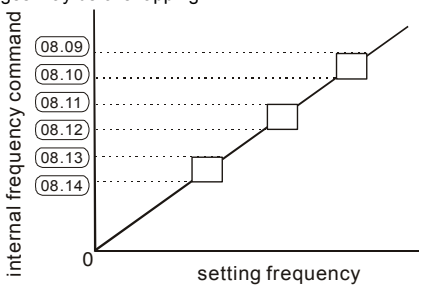

08.15	Auto Restart After Fault	Unit: 1
Settings	0 to 10	Factory Setting: 0
	0 Disable	

- Only after an over-current OC or over-voltage OV fault occurs, the AC motor drive can be reset/restarted automatically up to 10 times.
- Setting this parameter to 0 will disable automatic reset/restart operation after any fault has occurred.

  When enabled, the AC motor drive will restart with speed search, which starts at the frequency before the fault. To set the waiting time before restart after a fault, please set Pr. 08.07 Base Block Time for Speed Search.

08.16	Auto Reset Time at Restart after Fault	Unit: 0.1
Settings	0.1 to 6000 sec	Factory Setting: 60.0

- This parameter should be used in conjunction with Pr.08.15.

  For example: If Pr.08.15 is set to 10 and Pr.08.16 is set to 600s (10 min), and if there is no fault for over 600 seconds from the restart for the previous fault, the auto reset times for restart after fault will be reset to 10.

08.17 Automatic Energy-saving

Factory Setting: 0

Settings	0	Energy-saving operation disabled
	1	Energy-saving operation enabled

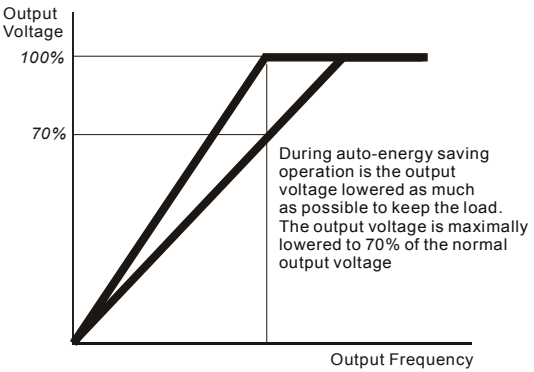

08.18 Automatic Voltage Regulation (AVR)

Factory Setting: 0

Settings	0	AVR function enabled
	1	AVR function disabled
	2	AVR function disabled for deceleration
	3	AVR function disabled for stop

- The rated voltage of the motor is usually 230V/200VAC 50Hz/60Hz and the input voltage of the AC motor drive may vary between 180V to 264 VAC 50Hz/60Hz. Therefore, when the AC motor drive is used without AVR function, the output voltage will be the same as the input voltage. When the motor runs at voltages exceeding the rated voltage with 12% - 20%, its lifetime will be shorter and it can be damaged due to higher temperature, failing insulation and unstable torque output.
- AVR function automatically regulates the AC motor drive output voltage to the Maximum Output Voltage (Pr.01.02). For instance, if Pr.01.02 is set at 200 VAC and the input voltage is at 200V to 264VAC, then the Maximum Output Voltage will automatically be reduced to a maximum of 200VAC.
- When the motor ramps to stop, the deceleration time is longer. When setting this parameter to 2 with auto acceleration/deceleration, the deceleration will be quicker.

08.19	Reserved

08.20	✓Compensation Coefficient for Motor Instability	Unit: 0.1
	Settings 0.0~5.0	Factory Setting: 0.0

- The drift current will occur in a specific zone of the motor and it will make motor instable. By using this parameter, it will improve this situation greatly.
- The drift current zone of the high-power motors is usually in the low frequency area.
- It is recommended to set to more than 2.0.

Group 9: Communication Parameters

There is a built-in RS-485 serial interface, marked RJ-45 near to the control terminals. The pins are defined below:



Each VFD-EL AC motor drive has a pre-assigned communication address specified by Pr.09.00. The RS485 master then controls each AC motor drive according to its communication address.

09.00	✓Communication Address	
	Settings 1 to 254	Factory Setting: 1

🕮 If the AC motor drive is controlled by RS-485 serial communication, the communication address for this drive must be set via this parameter. And the communication address for each AC motor drive must be different and unique.

09.01	✓Transmission Speed	
		Factory Setting: 1
	Settings 0	Baud rate 4800 bps (bits / second)
	1	Baud rate 9600 bps
	2	Baud rate 19200 bps
	3	Baud rate 38400 bps

🕮 This parameter is used to set the transmission speed between the RS485 master (PC, etc.) and AC motor drive.

09.02	✓Transmission Fault Treatment	
		Factory Setting: 3
	Settings 0	Warn and keep operating
	1	Warn and RAMP to stop
	2	Warn and COAST to stop
	3	No warning and keep operating

🕮 This parameter is set to how to react if transmission errors occur.

🕮 See list of error messages below (see section 3.6.)

09.03	✓Time-out Detection	Unit: 0.1

Settings 0.0 to 120.0 sec Factory Setting: 0.0

0.0 Disable

📖 If Pr.09.03 is not equal to 0.0, Pr.09.02=0~2, and there is no communication on the bus during the Time Out detection period (set by Pr.09.03), “cE10” will be shown on the keypad.

09.04	✓Communication Protocol

Factory Setting: 0

Settings		
	0	Modbus ASCII mode, protocol <7,N,2>
	1	Modbus ASCII mode, protocol <7,E,1>
	2	Modbus ASCII mode, protocol <7,O,1>
	3	Modbus RTU mode, protocol <8,N,2>
	4	Modbus RTU mode, protocol <8,E,1>
	5	Modbus RTU mode, protocol <8,O,1>
	6	Modbus RTU mode, protocol <8,N,1>
	7	Modbus RTU mode, protocol <8,E,2>
	8	Modbus RTU mode, protocol <8,O,2>
	9	Modbus ASCII mode, protocol <7,N,1>
	10	Modbus ASCII mode, protocol <7,E,2>
	11	Modbus ASCII mode, protocol <7,O,2>

📖 1. Control by PC

★A VFD-EL can be set up to communicate in Modbus networks using one of the following modes: ASCII (American Standard Code for Information Interchange) or RTU (Remote Terminal Unit). Users can select the desired mode along with the serial port communication protocol in Pr.09.04.

★Code Description:

The CPU will be about 1 second delay when using communication reset. Therefore, there is at least 1 second delay time in master station.

ASCII mode:

Each 8-bit data is the combination of two ASCII characters. For example, a 1-byte data:

64 Hex, shown as ‘64’ in ASCII, consists of ‘6’ (36Hex) and ‘4’ (34Hex).

Character	‘0’	‘1’	‘2’	‘3’	‘4’	‘5’	‘6’	‘7’
ASCII code	30H	31H	32H	33H	34H	35H	36H	37H

Character	'8'	'9'	'A'	'B'	'C'	'D'	'E'	'F'
ASCII code	38H	39H	41H	42H	43H	44H	45H	46H

RTU mode:

Each 8-bit data is the combination of two 4-bit hexadecimal characters. For example, 64 Hex.

2. Data Format

For ASCII:

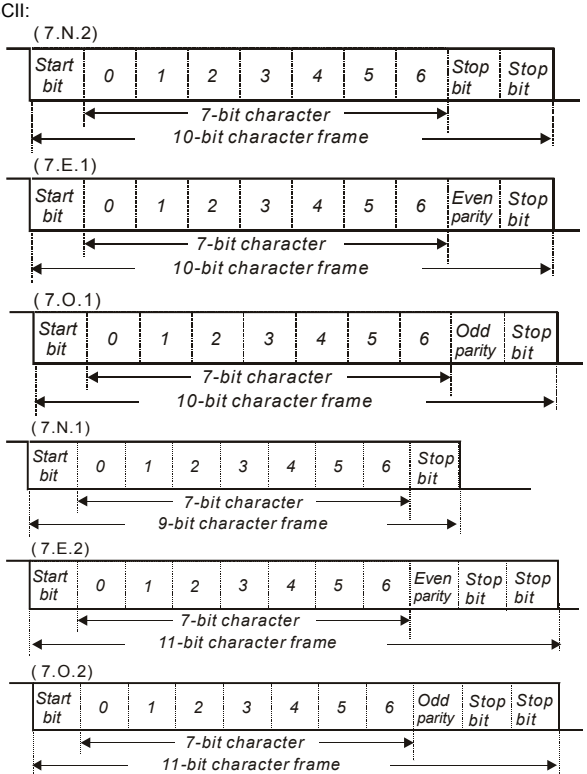

For RTU:

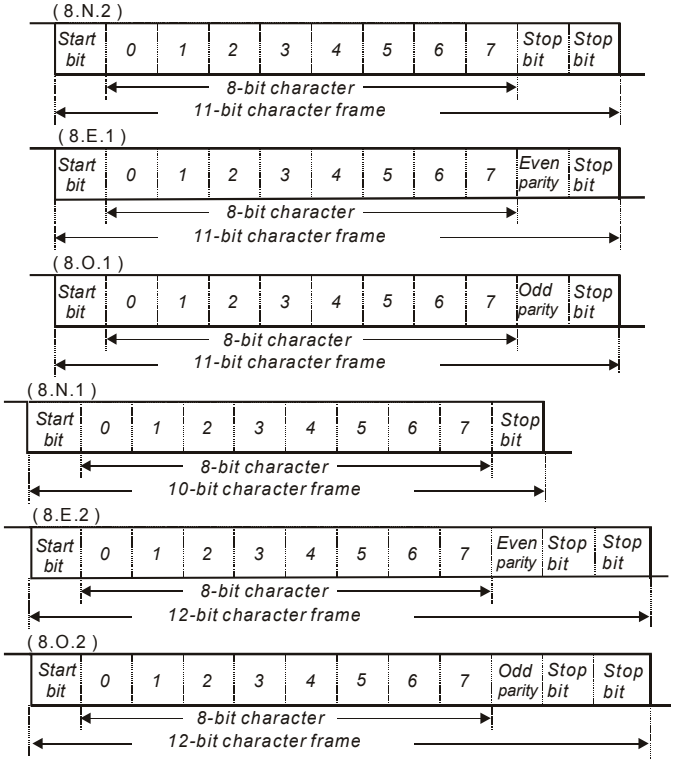

3. Communication Protocol

3.1 Communication Data Frame:

ASCII mode:

STX	Start character ':' (3AH)
Address Hi	Communication address: 8-bit address consists of 2 ASCII codes
Address Lo	
Function Hi	Command code: 8-bit command consists of 2 ASCII codes
Function Lo	
DATA (n-1) to DATA 0	Contents of data: Nx8-bit data consist of 2n ASCII codes n<=20, maximum of 40 ASCII codes

LRC CHK Hi	LRC check sum: 8-bit check sum consists of 2 ASCII codes
LRC CHK Lo	
END Hi	End characters: END1= CR (0DH), END0= LF(0AH)
END Lo	

RTU mode:

START	A silent interval of more than 10 ms
Address	Communication address: 8-bit address
Function	Command code: 8-bit command
DATA (n-1) to DATA 0	Contents of data: n×8-bit data, n<=40 (20 x 16-bit data)
CRC CHK Low	CRC check sum: 16-bit check sum consists of 2 8-bit characters
CRC CHK High	
END	A silent interval of more than 10 ms

3.2 Address (Communication Address)

Valid communication addresses are in the range of 0 to 254. A communication address equal to 0, means broadcast to all AC drives (AMD). In this case, the AMD will not reply any message to the master device.

00H: broadcast to all AC drives

01H: AC drive of address 01

0FH: AC drive of address 15

10H: AC drive of address 16

:

FEH: AC drive of address 254

For example, communication to AMD with address 16 decimal (10H):

ASCII mode: Address='1','0' => '1'=31H, '0'=30H

RTU mode: Address=10H

3.3 Function (Function code) and DATA (data characters)

The format of data characters depends on the function code.

03H: read data from register

06H: write single register

08H: loop detection

The available function codes and examples for VFD-EL are described as follows:

(1) 03H: multi read, read data from registers.

Example: reading continuous 2 data from register address 2102H, AMD address is 01H.

ASCII mode:

Command message:

STX	':'
Address	'0'
	'1'
Function	'0'
	'3'
Starting data address	'2'
	'1'
	'0'
	'2'
Number of data (count by word)	'0'
	'0'
	'0'
	'2'
LRC Check	'D'
	'7'
END	CR
	LF

Response message:

STX	':'
Address	'0'
	'1'
Function	'0'
	'3'
Number of data (Count by byte)	'0'
	'4'
Content of starting address 2102H	'1'
	'7'
	'7'
	'0'
Content of address 2103H	'0'
	'0'
	'0'
	'0'
LRC Check	'7'
	'1'
END	CR
	LF

RTU mode:

Command message:

Address	01H
Function	03H
Starting data address	21H
	02H
Number of data (count by word)	00H
	02H

Response message:

Address	01H
Function	03H
Number of data (count by byte)	04H
Content of address 2102H	17H
	70H

CRC CHK Low	6FH
CRC CHK High	F7H

Content of address 2103H	00H
	00H
CRC CHK Low	FEH
CRC CHK High	5CH

(2) 06H: single write, write single data to register.

Example: writing data 6000(1770H) to register 0100H. AMD address is 01H.

ASCII mode:

Command message:

STX	':'
Address	'0'
	'1'
Function	'0'
	'6'
Data address	'0'
	'1'
	'0'
	'0'
Data content	'1'
	'7'
	'7'
	'0'
LRC Check	'7'
	'1'
END	CR
	LF

Response message:

STX	':'
Address	'0'
	'1'
Function	'0'
	'6'
Data address	'0'
	'1'
	'0'
	'0'
Data content	'1'
	'7'
	'7'
	'0'
LRC Check	'7'
	'1'
END	CR
	LF

RTU mode:

Command message:

Address	01H
Function	06H
Data address	01H
	00H

Response message:

Address	01H
Function	06H
Data address	01H
	00H

Data content	17H
	70H
CRC CHK Low	86H
CRC CHK High	22H

Data content	17H
	70H
CRC CHK Low	86H
CRC CHK High	22H

3.4 Check sum

ASCII mode:

LRC (Longitudinal Redundancy Check) is calculated by summing up, module 256, the values of the bytes from ADR1 to last data character then calculating the hexadecimal representation of the 2's-complement negation of the sum.

For example, reading 1 word from address 0401H of the AC drive with address 01H.

STX	':'
Address 1	'0'
Address 0	'1'
Function 1	'0'
Function 0	'3'
Starting data address	'0'
	'4'
	'0'
	'1'
Number of data	'0'
	'0'
	'0'
	'1'
LRC Check 1	'F'
LRC Check 0	'6'
END 1	CR
END 0	LF

01H+03H+04H+01H+00H+01H=0AH, the 2's-complement negation of 0AH is **F6**H.

RTU mode:

Address	01H
Function	03H
Starting data address	21H
	02H
Number of data (count by word)	00H
	02H
CRC CHK Low	6FH
CRC CHK High	F7H

CRC (Cyclical Redundancy Check) is calculated by the following steps:

Step 1: Load a 16-bit register (called CRC register) with FFFFH.

Step 2: Exclusive OR the first 8-bit byte of the command message with the low order byte of the 16-bit CRC register, putting the result in the CRC register.

Step 3: Examine the LSB of CRC register.

Step 4: If the LSB of CRC register is 0, shift the CRC register one bit to the right with MSB zero filling, then repeat step 3. If the LSB of CRC register is 1, shift the CRC register one bit to the right with MSB zero filling, Exclusive OR the CRC register with the polynomial value A001H, then repeat step 3.

Step 5: Repeat step 3 and 4 until eight shifts have been performed. When this is done, a complete 8-bit byte will have been processed.

Step 6: Repeat step 2 to 5 for the next 8-bit byte of the command message. Continue doing this until all bytes have been processed. The final contents of the CRC register are the CRC value. When transmitting the CRC value in the message, the upper and lower bytes of the CRC value must be swapped, i.e. the lower order byte will be transmitted first.

The following is an example of CRC generation using C language. The function takes two arguments:

Unsigned char* data ← a pointer to the message buffer

Unsigned char length ← the quantity of bytes in the message buffer

The function returns the CRC value as a type of unsigned integer.

```
Unsigned int crc_chk(unsigned char* data, unsigned char length){
  int j;
  unsigned int reg_crc=0xFFFF;
  while(length--){
    reg_crc ^= *data++;
```

```
  for(j=0;j<8;j++){
    if(reg_crc & 0x01){  /* LSB(b0)=1 */
      reg_crc=(reg_crc>>1) ^ 0xA001;
    }else{
      reg_crc=reg_crc >>1;
    }
   }
 }
 return reg_crc;
}
```

3.5 Address list

The contents of available addresses are shown as below:

Content	Address	Function	
AC drive Parameters	GGnnH	GG means parameter group, nn means parameter number, for example, the address of Pr 04.01 is 0401H. Refer to chapter 5 for the function of each parameter. When reading parameter by command code 03H, only one parameter can be read at one time.	
Command Write only	2000H	Bit 0-1	00B: No function 01B: Stop 10B: Run 11B: Jog + Run
		Bit 2-3	Reserved
		Bit 4-5	00B: No function 01B: FWD 10B: REV 11B: Change direction
		Bit 6-7	00B: Comm. forced 1st accel/decel 01B: Comm. forced 2nd accel/decel
		Bit 8-15	Reserved
	2001H	Frequency command	
	2002H	Bit 0	1: EF (external fault) on
		Bit 1	1: Reset
		Bit 2-15	Reserved

Content	Address	Function
Status monitor Read only	2100H	Error code:
		0: No error occurred
		1: Over-current (oc)
		2: Over-voltage (ov)
		3: IGBT Overheat (oH1)
		4: Reserved
		5: Overload (oL)
		6: Overload1 (oL1)
		7: Overload2 (oL2)
		8: External fault (EF)
		9: Current exceeds 2 times rated current during accel (ocA)
		10: Current exceeds 2 times rated current during decel (ocd)
		11: Current exceeds 2 times rated current during steady state operation (ocn)
		12: Ground Fault (GFF)
Status monitor Read only	2100H	13: Reserved
		14: PHL (Phase-Loss)
		15: Reserved
		16: Auto accel/decel failure (cFA)
		17: Software protection enabled (codE)
		18: Power Board CPU WRITE failure (CF1.0)
		19: Power Board CPU READ failure (CF2.0)
		20: CC, OC Hardware protection failure (HPF1)
		21: OV Hardware protection failure (HPF2)
		22: GFF Hardware protection failure (HPF3)
		23: OC Hardware protection failure (HPF4)
		24: U-phase error (cF3.0)
		25: V-phase error (cF3.1)
		26: W-phase error (cF3.2)
		27: DCBUS error (cF3.3)

Content	Address	Function	
	2101H	28: IGBT Overheat (cF3.4)	
		29: Reserved	
		30: Reserved	
		31: Reserved	
		32: ACI signal error (AErr)	
		33: Reserved	
		34: Motor PTC overheat protection (PtC1)	
		Status of AC drive	
		Bit 0-1	00B: RUN LED is off, STOP LED is on (The AC motor Drive stops)
			01B: RUN LED blinks, STOP LED is on (When AC motor drive decelerates to stop)
			10B: RUN LED is on, STOP LED blinks (When AC motor drive is standby)
			11B: RUN LED is on, STOP LED is off (When AC motor drive runs)
		Bit 2	1: JOG command
		Bit 3-4	00B: FWD LED is on, REV LED is off (When AC motor drive runs forward)
			01B: FWD LED is on, REV LED blinks (When AC motor drive runs from reverse to forward)
			10B: FWD LED blinks, REV LED is on (When AC motor drive runs from forward to reverse)
			11B: FWD LED is off, REV LED is on (When AC motor drive runs reverse)
		Bit 5-7	Reserved
		Bit 8	1: Master frequency Controlled by communication interface
		Bit 9	1: Master frequency controlled by analog signal
		Bit 10	1: Operation command controlled by communication interface
		Bit 11-15	Reserved
	2102H	Frequency command (F)	
	2103H	Output frequency (H)	

Content	Address	Function
	2104H	Output current (AXX.X)
	2105H	Reserved
	2106H	Display analog signal of PID feedback input terminal
	2107H	Reserved
	2108H	DC-BUS Voltage (UXXX.X)
	2109H	Output voltage (EXXX.X)
	210AH	Display temperature of IGBT (°C)
	2116H	User defined (Low word)
	2117H	User defined (High word)

Note: 2116H is number display of Pr.00.04. High byte of 2117H is number of decimal places of 2116H. Low byte of 2117H is ASCII code of alphabet display of Pr.00.04.

3.6 Exception response:

The AC motor drive is expected to return a normal response after receiving command messages from the master device. The following depicts the conditions when no normal response is replied to the master device.

The AC motor drive does not receive the messages due to a communication error; thus, the AC motor drive has no response. The master device will eventually process a timeout condition.

The AC motor drive receives the messages without a communication error, but cannot handle them. An exception response will be returned to the master device and an error message "CExx" will be displayed on the keypad of AC motor drive. The xx of "CExx" is a decimal code equal to the exception code that is described below.

In the exception response, the most significant bit of the original command code is set to 1, and an exception code which explains the condition that caused the exception is returned.

Example of an exception response of command code 06H and exception code 02H:

ASCII mode:

STX	':'
Address Low	'0'
Address High	'1'
Function Low	'8'
Function High	'6'

RTU mode:

Address	01H
Function	86H
Exception code	02H
CRC CHK Low	C3H
CRC CHK High	A1H

Exception code	'0'
	'2'
LRC CHK Low	'7'
LRC CHK High	'7'
END 1	CR
END 0	LF

The explanation of exception codes:

Exception code	Explanation
01	Illegal function code: The function code received in the command message is not available for the AC motor drive.
02	Illegal data address: The data address received in the command message is not available for the AC motor drive.
03	Illegal data value: The data value received in the command message is not available for the AC drive.
04	Slave device failure: The AC motor drive is unable to perform the requested action.
10	Communication time-out: If Pr.09.03 is not equal to 0.0, Pr.09.02=0~2, and there is no communication on the bus during the Time Out detection period (set by Pr.09.03), "cE10" will be shown on the keypad.

3.7 Communication program of PC:

The following is a simple example of how to write a communication program for Modbus ASCII mode on a PC in C language.

```
#include<stdio.h>
#include<dos.h>
#include<conio.h>
#include<process.h>
#define PORT 0x03F8  /* the address of COM1 */
/* the address offset value relative to COM1 */
#define THR  0x0000
#define RDR  0x0000
```

```
#define BRDL  0x0000
#define IER  0x0001
#define BRDH 0x0001
#define LCR  0x0003
#define MCR  0x0004
#define LSR  0x0005
#define MSR  0x0006
unsigned char rdat[60];
/* read 2 data from address 2102H of AC drive with address 1 */
unsigned char tdat[60]={':','0','1','0','3','2','1','0','2', '0','0','0','2','D','7','\r','\n'};
void main(){
int i;
outportb(PORT+MCR,0x08);            /* interrupt enable */
outportb(PORT+IER,0x01);           /* interrupt as data in */
outportb(PORT+LCR,(inportb(PORT+LCR) | 0x80));
/* the BRDL/BRDH can be access as LCR.b7==1 */
outportb(PORT+BRDL,12);             /* set baudrate=9600, 12=115200/9600*/
outportb(PORT+BRDH,0x00);
outportb(PORT+LCR,0x06);            /* set protocol, <7,N,2>=06H, <7,E,1>=1AH,
<7,O,1>=0AH, <8,N,2>=07H, <8,E,1>=1BH, <8,O,1>=0BH   */
for(i=0;i<=16;i++){
while(!(inportb(PORT+LSR) & 0x20)); /* wait until THR empty */
outportb(PORT+THR,tdat[i]);       /* send data to THR */    }
i=0;
while(!kbhit()){
if(inportb(PORT+LSR) & 0x01){ /* b0==1, read data ready */
rdat[i++]=inportb(PORT+RDR); /* read data form RDR */
}   }    }
```

09.05	Reserved
09.06	Reserved

09.07	✓Response Delay Time	Unit: 2ms
	Settings 0 ~ 200 (400msec)	Factory Setting: 1

🕮 This parameter is the response delay time after AC drive receives communication command as shown in the following. 1 unit = 2 msec.

Call 1(800)985-6929 for Sales deltaacdrives.com sales@deltaacdrives.com

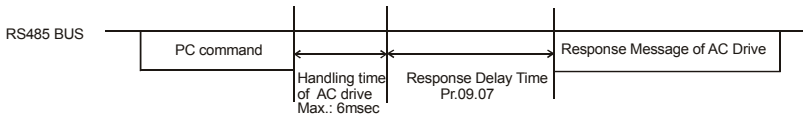

Call 1(800)985-6929 for Sales deltaacdrives.com sales@deltaacdrives.com

Group 10: PID Control

10.00 PID Set Point Selection

Factory Setting: 0

Settings	0	Disable
	1	Digital keypad UP/DOWN keys
	2	AVI 0 ~ +10VDC
	3	ACI 4 ~ 20mA
	4	PID set point (Pr.10.11)

10.01 Input Terminal for PID Feedback

Factory Setting: 0

Settings	0	**Positive** PID feedback from external terminal AVI (0 ~ +10VDC)
	1	**Negative** PID feedback from external terminal AVI (0 ~ +10VDC)
	2	**Positive** PID feedback from external terminal ACI (4 ~ 20mA)
	3	**Negative** PID feedback from external terminal ACI (4 ~ 20mA)

- Note that the measured variable (feedback) controls the output frequency (Hz). Select input terminal accordingly. Make sure this parameter setting does not conflict with the setting for Pr.10.00 (Master Frequency).
- When Pr.10.00 is set to 2 or 3, the set point (Master Frequency) for PID control is obtained from the AVI or ACI external terminal (0 to +10V or 4-20mA) or from multi-step speed. When Pr.10.00 is set to 1, the set point is obtained from the keypad.
- Negative feedback means: +target value – feedback
  Positive feedback means: -target value + feedback.

10.11 ✓Source of PID Set point Unit: 0.01

Settings 0.00 to 600.0Hz Factory Setting: 0.00

- This parameter is used in conjunction with Pr.10.00 set 4 to input a set point in Hz.

10.02 ✓Proportional Gain (P) Unit: 0. 1

Settings 0.0 to 10.0 Factory Setting: 1.0

- This parameter specifies proportional control and associated gain (P). If the other two gains (I and D) are set to zero, proportional control is the only one effective. With 10% deviation (error) and P=1, the output will be P x10% x Master Frequency.

- When P is greater than 1, it will decrease the deviation and get the faster response speed. But if setting too large value in Pr.10.02, it may cause the increased deviation during the stable area.

NOTE

The parameter can be set during operation for easy tuning.

10.03	✓Integral Time (I)	Unit: 0.01
	Settings 0.00 to 100.0 sec	Factory Setting: 1.00
	0.00 Disable	

- This parameter specifies integral control (continual sum of the deviation) and associated gain (I). When the integral gain is set to 1 and the deviation is fixed, the output is equal to the input (deviation) once the integral time setting is attained.
- It can use integral time to eliminate the deviation during the stable area. If setting too large value in Pr.10.03, it may cause lower system response.

NOTE

The parameter can be set during operation for easy tuning.

10.04	✓Derivative Control (D)	Unit: 0.01
	Settings 0.00 to 1.00 sec	Factory Setting: 0.00

- This parameter specifies derivative control (rate of change of the input) and associated gain (D). With this parameter set to 1, the PID output is equal to differential time x (present deviation – previous deviation). It increases the response speed but it may cause over-compensation.

NOTE

The parameter can be set during operation for easy tuning.

10.05	Upper Bound for Integral Control	Unit: 1
	Settings 0 to 100 %	Factory Setting: 100

This parameter defines an upper bound or limit for the integral gain (I) and therefore limits the Master Frequency.

The formula is: Integral upper bound = Maximum Output Frequency (Pr.01.00) x (Pr.10.05). This parameter can limit the Maximum Output Frequency.

10.06	Primary Delay Filter Time	Unit: 0.1
	Settings 0.0 to 2.5 sec	Factory Setting: 0.0

To avoid amplification of measurement noise in the controller output, a derivative digital filter is inserted. This filter helps to dampen oscillations.

The complete PID diagram is in the following:

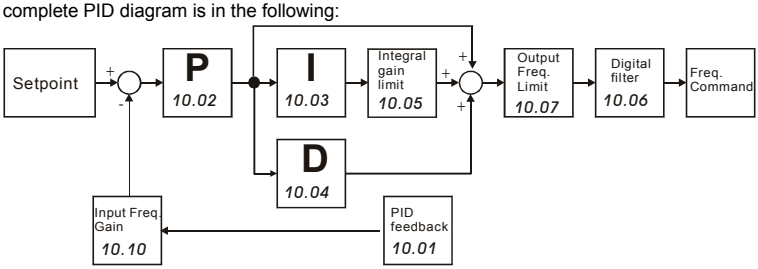

10.07	PID Output Frequency Limit	Unit: 1
	Settings 0 to 110 %	Factory Setting: 100

This parameter defines the percentage of output frequency limit during the PID control. The formula is Output Frequency Limit = Maximum Output Frequency (Pr.01.00) X Pr.10.07 %. This parameter will limit the Maximum Output Frequency. An overall limit for the output frequency can be set in Pr.01.07.

10.08	PID Feedback Signal Detection Time	Unit: 0.1
	Settings 0.0 to d 3600 sec	Factory Setting: 60.0

This function in only for ACI signal.

This parameter defines the time during which the PID feedback must be abnormal before a warning (see Pr.10.09) is given. It also can be modified according to the system feedback signal time.

If this parameter is set to 0.0, the system would not detect any abnormality signal.

10.09	Treatment of the Erroneous Feedback Signals (for PID feedback error)	
		Factory Setting: 0
Settings	0	Warning and RAMP to stop
	1	Warning and COAST to stop
	2	Warning and keep operating

📖 This function in only for ACI signal.

📖 AC motor drive action when the feedback signals (analog PID feedback) are abnormal according to Pr.10.16.

10.10	Gain Over the PID Detection Value	Unit: 0.1
Settings	0.0 to 10.0	Factory Setting: 1.0

📖 This is the gain adjustment over the feedback detection value. Refer to PID control block diagram in Pr.10.06 for detail.

10.12	PID Feedback Level	Unit: 0.1
Settings	1.0 to 50.0%	Factory Setting: 10.0
10.13	Detection Time of PID Feedback	Unit: 0.1
Settings	0.1 to 300.0 sec	Factory Setting: 5.0

📖 This parameter is used to set detection of the offset between set point and feedback.

📖 When the offset is higher than (the setting of Pr.10.12 X Pr.01.00) for a time exceeding the setting of Pr.10.13, the AC motor drive will output a signal when Pr.03.00 is set to 16 and will act according to Pr.10.20.

10.14	Sleep/Wake Up Detection Time	Unit: 0.1
Settings	0.0 to 6550 sec	Factory Setting: 0.0
10.15	Sleep Frequency	Unit: 0.01
Settings	0.00 to 600.0 Hz	Factory Setting: 0.00
10.16	Wakeup Frequency	Unit: 0.01
Settings	0.00 to 600.0 Hz	Factory Setting: 0.00

📖 When the actual output frequency $\leq$ Pr.10.15 and the time exceeds the setting of Pr.10.14, the AC motor drive will be in sleep mode.

- When the actual frequency command > Pr.10.16 and the time exceeds the setting of Pr.10.14, the AC motor drive will restart.
- When the AC motor drive is in sleep mode, frequency command is still calculated by PID. When frequency reaches wake up frequency, AC motor drive will accelerate from Pr.01.05 minimum frequency following the V/f curve.
- The wake up frequency must be higher than sleep frequency.

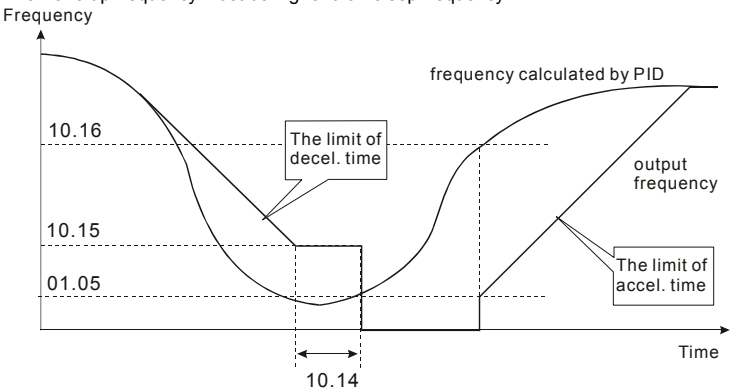

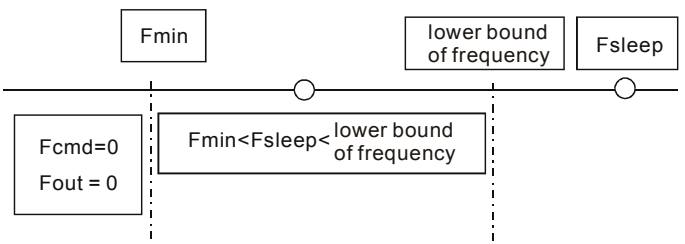

- When output frequency ≤ sleep frequency and time > detection time, it will go in sleep mode.
- When min. output frequency ≦ PID frequency ≦ lower bound of frequency and sleep function is enabled (output frequency ≤ sleep frequency and time > detection time), frequency will be 0 (in sleep mode). If sleep function is disabled, frequency command = lower bound frequency.
- When PID frequency < min. output frequency and sleep function is enabled (output frequency ≤ sleep frequency and time > detection time), output frequency =0 (in sleep mode).
  If output frequency ≤ sleep frequency but time < detection time, frequency command = lower frequency. If sleep function is disabled, output frequency =0.

10.17 Minimum PID Output Frequency Selection

Factory Setting: 0

Settings 0 By PID control

1 By Minimum output frequency (Pr.01.05)

This is the source selection of minimum output frequency when control is by PID.

10.18 PID Control Detection Signal Reference Unit: 0.1

Settings 1.0 to 99.9 Factory Setting: 99.9

When Pr.00.04 is set to 8, it will display 00:00 as follows.

This parameter is used only for display and has no relation with Pr.00.13, Pr.00.14, Pr.02.18 and Pr.02.19.



10.19 PID Calculation Mode Selection

Factory Setting: 0

Settings 0 Series mode

1 Parallel mode

Series mode

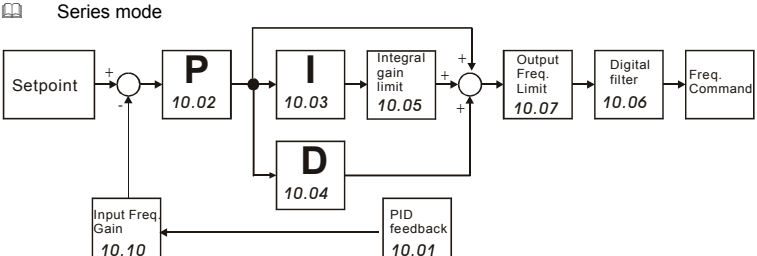

Parallel mode

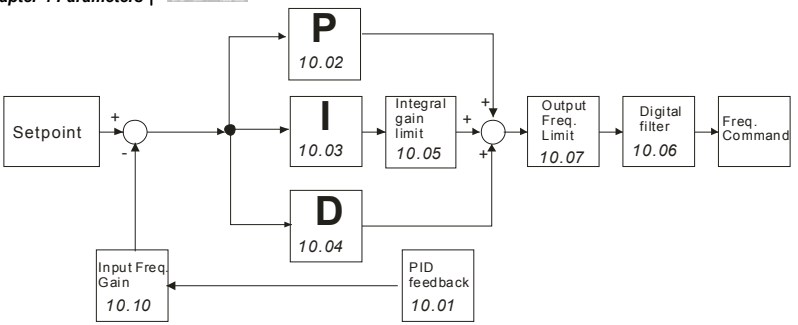

10.20	Treatment of the Erroneous PID Feedback Level	
		Factory Setting: 0
Settings	0	Keep operating
	1	Coast to stop
	2	Ramp to stop
	3	Ramp to stop and restart after time set in Pr.10.21

📖 In PID control mode, it will act according to Pr.10.20 when erroneous PID feedback level occurs.

10.21	Restart Delay Time after Erroneous PID Deviation Level	Unit: 1
Settings	1 to 9999 sec	Factory Setting: 60

10.22	✓Set Point Deviation Level	Unit: 1
Settings	0 to 100%	Factory Setting: 0

10.23	Detection Time of Set Point Deviation Level	Unit: 1
Settings	1 to 9999 sec	Factory Setting: 10

📖 When the deviation is less than Pr.10.22 (in the range of PID set point to Pr.10.22 X PID set point) for a time exceeding the setting of Pr.10.23, the AC motor drive will decelerate to stop to be constant pressure status (This deceleration time is the setting of Pr.01.12). The system will be ready when the deviation is within the range of PID set point to Pr.10.22 X PID set point during deceleration.

Example: suppose that the set point of constant pressure control of a pump is 4kg, Pr.10.22 is set to 5%, Pr.10.23 is set to 15 seconds. It means that deviation is 0.2kg (4kgX5%=0.2kg), i.e. when feedback value is higher than 3.8kg for a time exceeding 15 seconds, the AC motor drive will decelerate to stop (this deceleration time will act according to Pr.01.12). When the feedback value is less than 3.8kg, the AC motor drive will start to run.

10.24	Offset Level of Liquid Leakage	Unit: 1
	Settings 0 to 50%	Factory Setting: 0

In the constant pressure status, when the liquid leakage is higher than Pr.10.24 X PID set point, the AC motor drive will start to run.

It is used to prevent frequent run/stop operation due to liquid leakage.

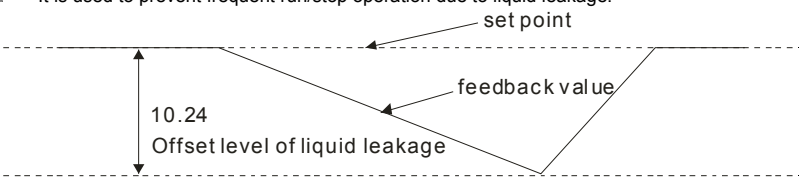

10.25	Liquid Leakage Change Detection	Unit: 1
	Settings 0 to 100% (0:disable)	Factory Setting: 0

10.26	Time Setting for Liquid Leakage Change	Unit: 0.1
	Settings 0.1 to 10.0 sec (0:disable)	Factory Setting: 0.5

When the change of feedback value is less than the settings of Pr.10.25 and Pr.10.26, it means that the liquid is leaking. When the system is in constant pressure status, the AC motor drive will start to run if the feedback value is higher than these two settings.

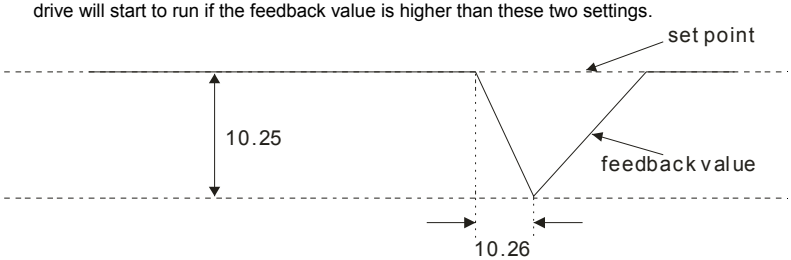

- Example: suppose that the set point of constant pressure control of a pump is 4kg, Pr.10.22 is set to 5%, Pr.10.23 is set to 15 seconds, Pr.10.24 is set to 25%, Pr.10.25 is set to 3% and Pr.10.26 is set to 0.5 seconds. It means that offset is 0.2kg (4kgX5%=0.2kg), i.e. when feedback value is higher than 3.8kg for a time exceeding 15 seconds, the AC motor drive will decelerate to stop (this deceleration time will act according to Pr.01.12). When the feedback value is less than 3.8kg, the AC motor drive will start to run.
- Status 1: Suppose that the AC motor drive is in the constant pressure status and the feedback change value is less than 0.12kg within 0.5 seconds. The AC motor drive won't run until the feedback value is decreased by this proportion to the value less than 3kg.
- Status 2: When the AC motor drive is in constant pressure, it won't run until the feedback change value is less than 3.88kg (4-4kgX3%=3.88kg) for a time exceeding 0.5 seconds.

10.27 | 10.33	Reserved

Chapter 5 Troubleshooting

5.1 Over Current (OC)

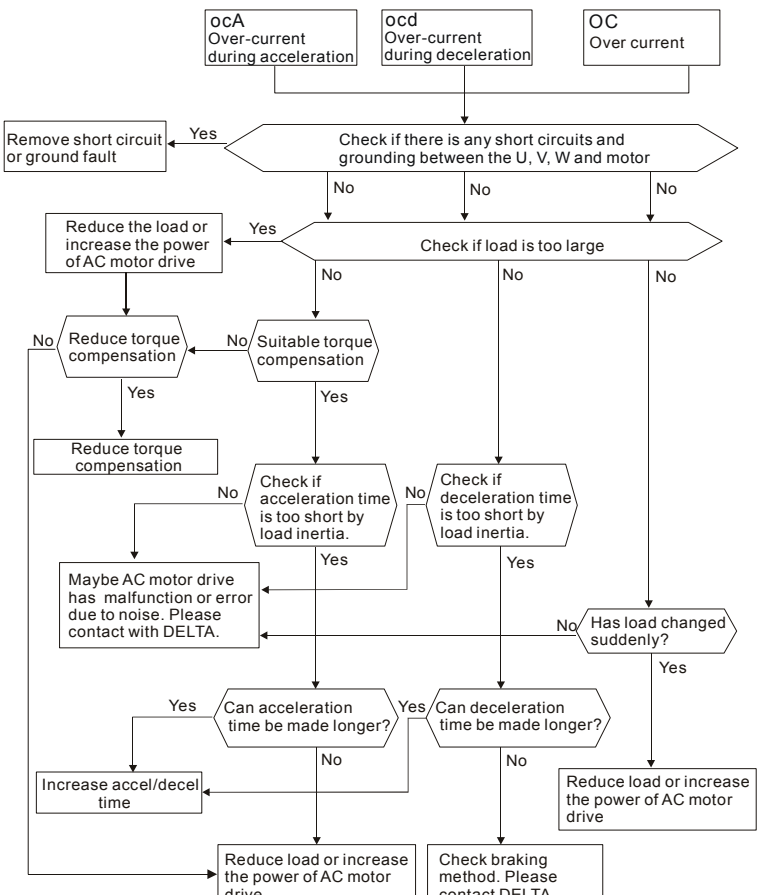

5.2 Ground Fault

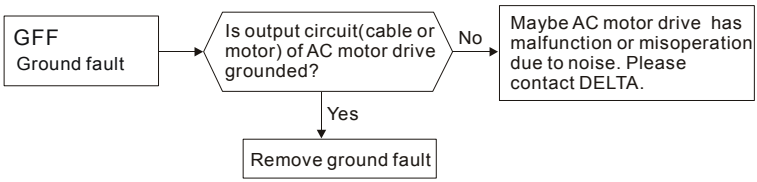

5.3 Over Voltage (OV)

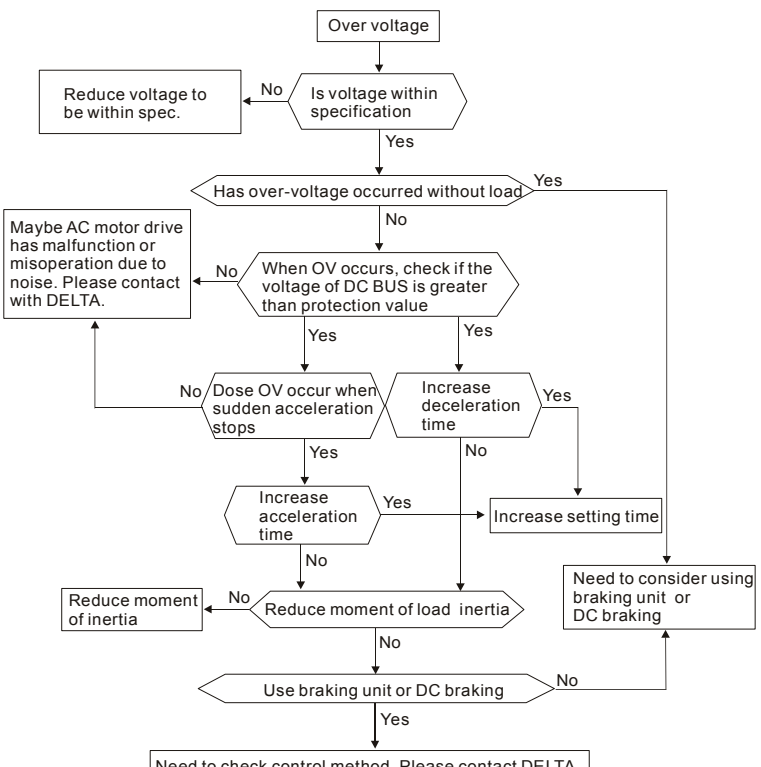

5.4 Low Voltage (Lv)

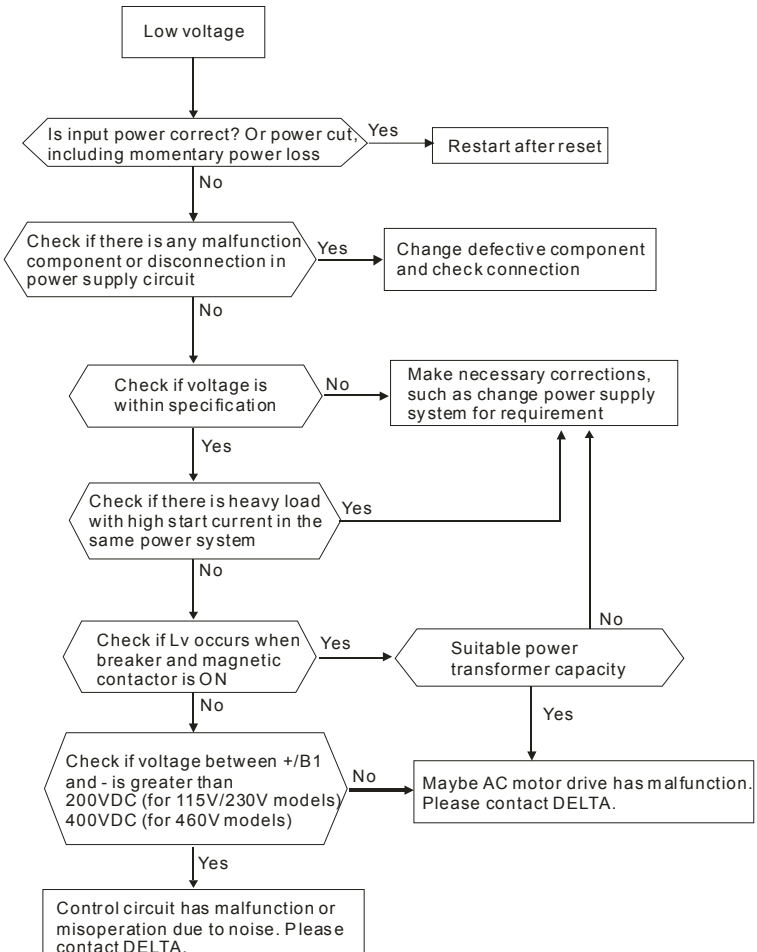

5.5 Over Heat (OH1)

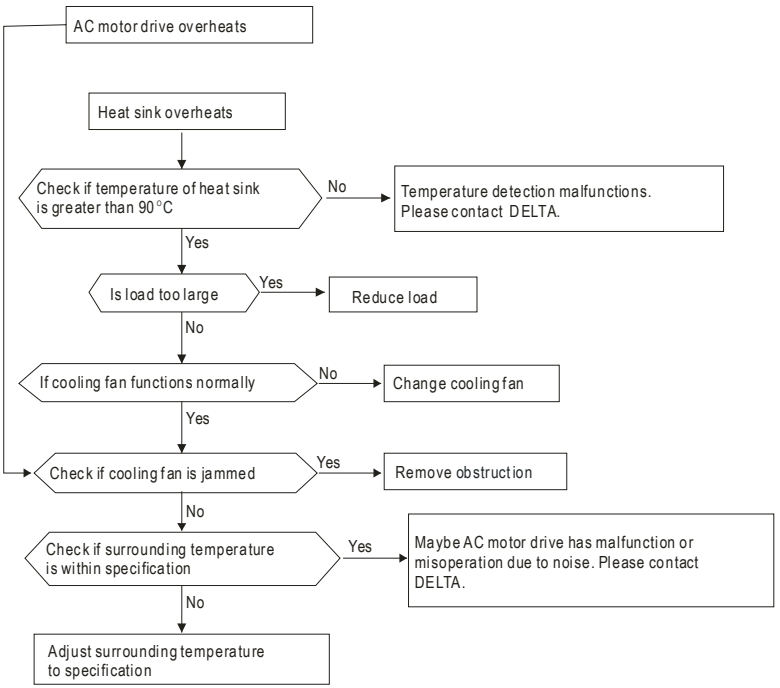

5.6 Overload

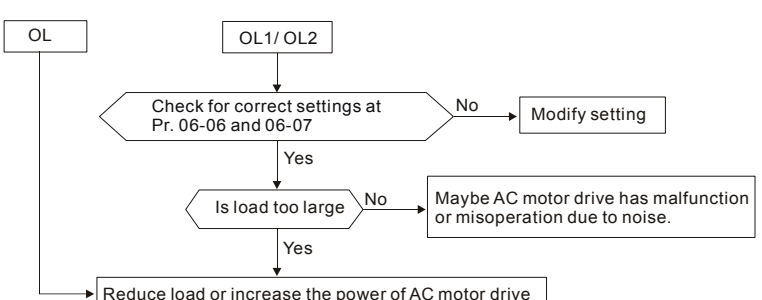

5.7 Keypad Display is Abnormal

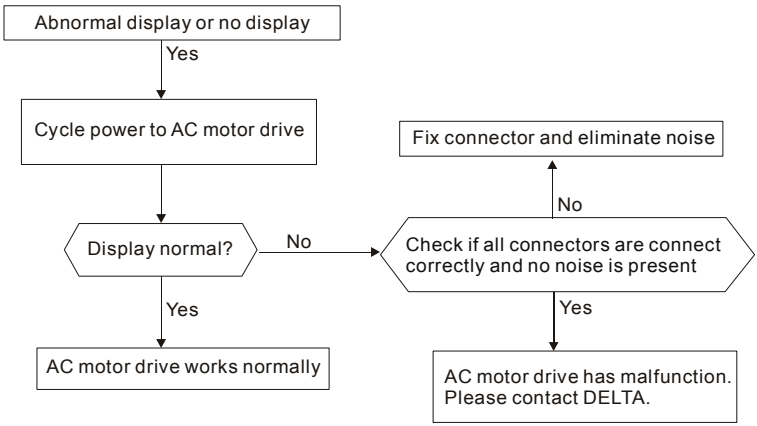

5.8 Phase Loss (PHL)

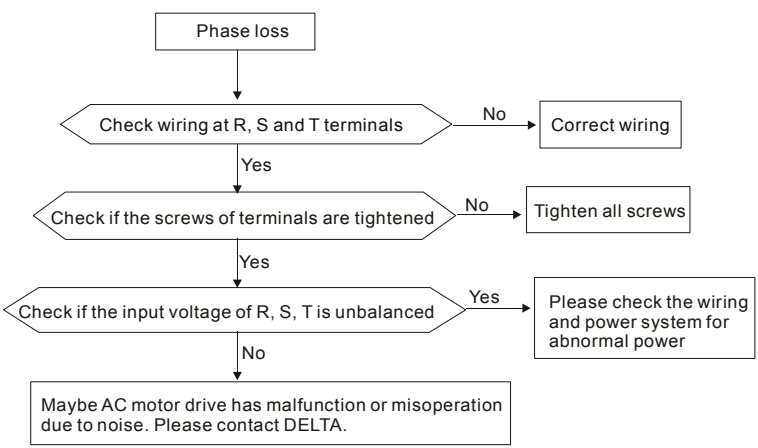

5.9 Motor cannot Run

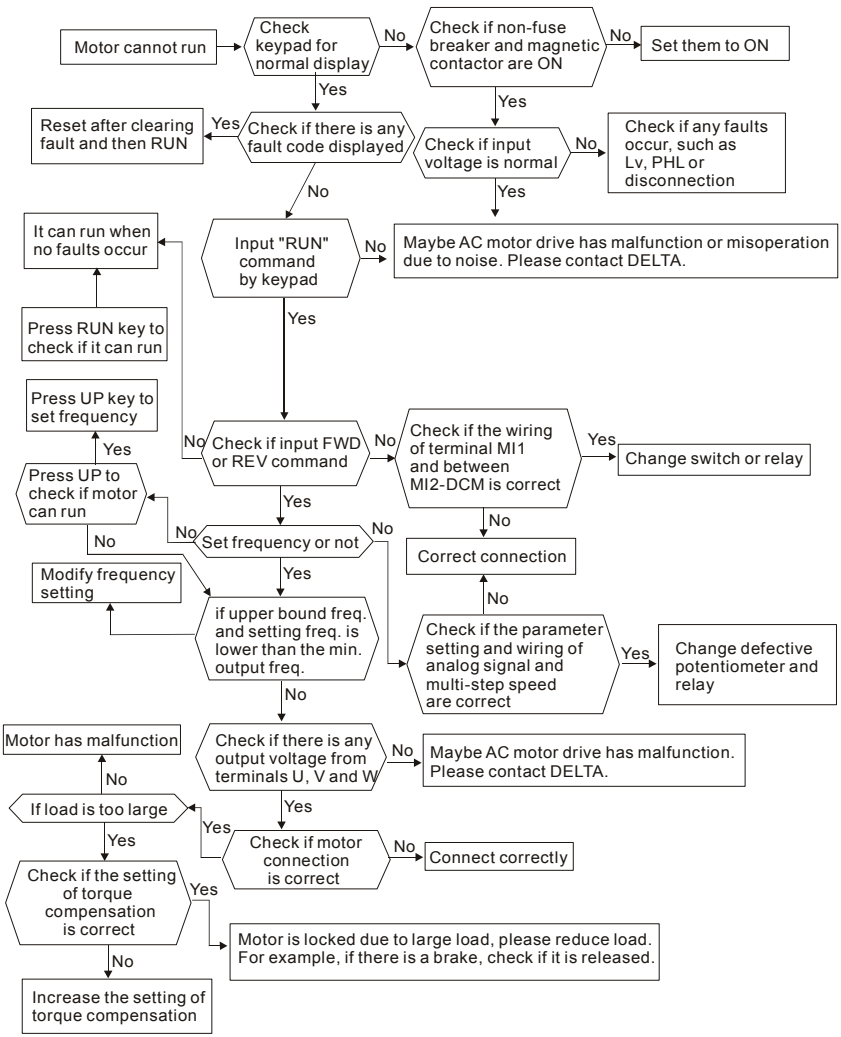

Call 1(800)985-6929 for Sales deltaacdrives.com sales@deltaacdrives.com

5.10 Motor Speed cannot be Changed

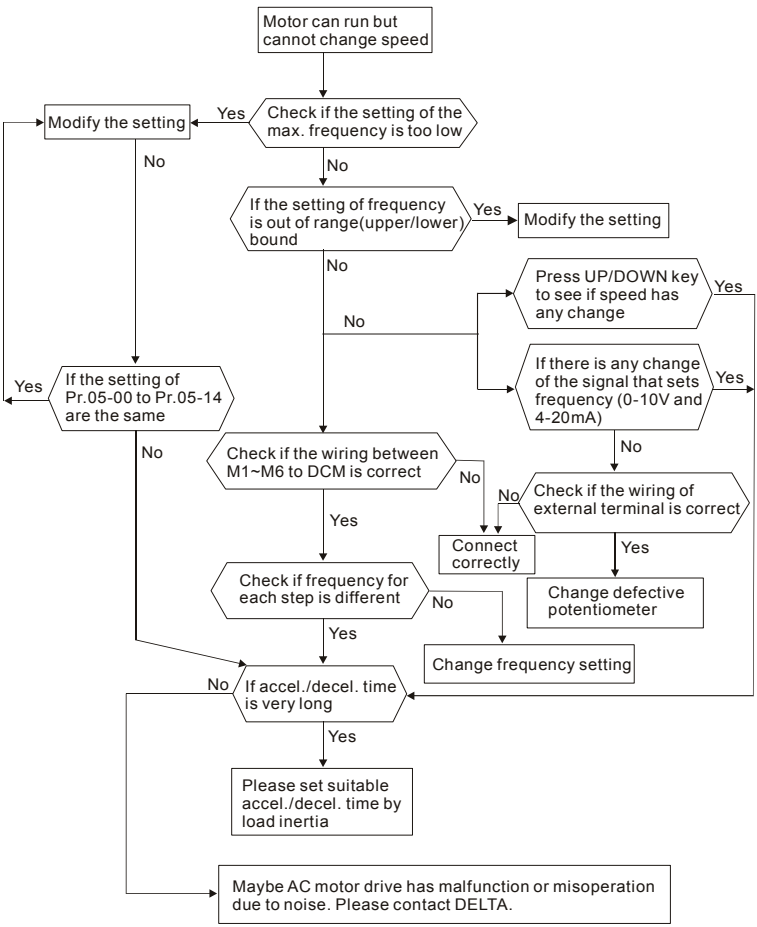

Call 1(800)985-6929 for Sales deltaacdrives.com sales@deltaacdrives.com

5.11 Motor Stalls during Acceleration

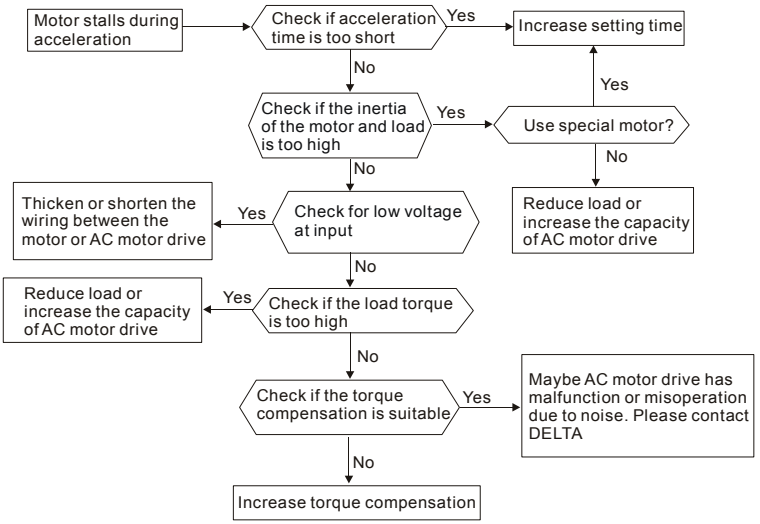

5.12 The Motor does not Run as Expected

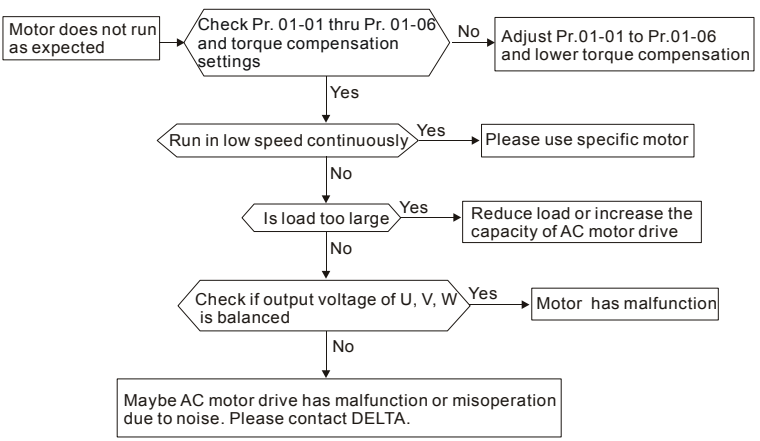

5.13 Electromagnetic/Induction Noise

Many sources of noise surround AC motor drives and penetrate it by radiation or conduction. It may cause malfunctioning of the control circuits and even damage the AC motor drive. Of course, there are solutions to increase the noise tolerance of an AC motor drive. But this has its limits. Therefore, solving it from the outside as follows will be the best.

1. Add surge suppressor on the relays and contacts to suppress switching surges.
2. Shorten the wiring length of the control circuit or serial communication and keep them separated from the power circuit wiring.
3. Comply with the wiring regulations by using shielded wires and isolation amplifiers for long length.
4. The grounding terminal should comply with the local regulations and be grounded independently, i.e. not to have common ground with electric welding machines and other power equipment.
5. Connect a noise filter at the mains input terminal of the AC motor drive to filter noise from the power circuit. VFD-EL can have a built-in filter as option.

In short, solutions for electromagnetic noise exist of “no product”(disconnect disturbing equipment), “no spread”(limit emission for disturbing equipment) and “no receive”(enhance immunity).

5.14 Environmental Condition

Since the AC motor drive is an electronic device, you should comply with the environmental conditions. Here are some remedial measures if necessary.

1. To prevent vibration, the use of anti-vibration dampers is the last choice. Vibrations must be within the specification. Vibration causes mechanical stress and it should not occur frequently, continuously or repeatedly to prevent damage to the AC motor drive.
2. Store the AC motor drive in a clean and dry location, free from corrosive fumes/dust to prevent corrosion and poor contacts. Poor insulation in a humid location can cause short-circuits. If necessary, install the AC motor drive in a dust-proof and painted enclosure and in particular situations, use a completely sealed enclosure.
3. The ambient temperature should be within the specification. Too high or too low temperature will affect the lifetime and reliability. For semiconductor components, damage will occur once any specification is out of range. Therefore, it is necessary to periodically check air quality and the cooling fan and provide extra cooling of necessary. In addition, the microcomputer may not work in extremely low temperatures, making cabinet heating necessary.

4. Store within a relative humidity range of 0% to 90% and non-condensing environment. Use an air conditioner and/or exsiccator.

5.15 Affecting Other Machines

An AC motor drive may affect the operation of other machines due to many reasons. Some solutions are:

- High Harmonics at Power Side

  High harmonics at power side during running can be improved by:

1. Separate the power system: use a transformer for AC motor drive.
2. Use a reactor at the power input terminal of the AC motor drive.
3. If phase lead capacitors are used (never on the AC motor drive output!!), use serial reactors to prevent damage to the capacitors damage from high harmonics.

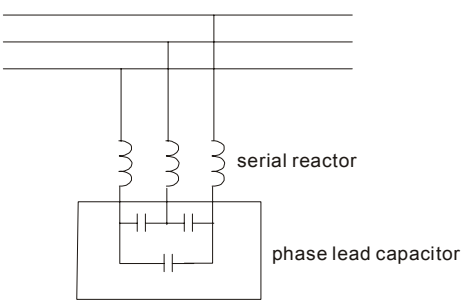

- Motor Temperature Rises

  When the motor is a standard induction motor with fan, the cooling will be bad at low speeds, causing the motor to overheat. Besides, high harmonics at the output increases copper and core losses. The following measures should be used depending on load and operation range.

1. Use a motor with independent ventilation (forced external cooling) or increase the motor rated power.
2. Use a special inverter duty motor.
3. Do NOT run at low speeds for long time.

Chapter 6 Fault Code Information and Maintenance

6.1 Fault Code Information

The AC motor drive has a comprehensive fault diagnostic system that includes several different alarms and fault messages. Once a fault is detected, the corresponding protective functions will be activated. The following faults are displayed as shown on the AC motor drive digital keypad display. The five most recent faults can be read from the digital keypad or communication.



Wait 5 seconds after a fault has been cleared before performing reset via keypad of input terminal.

6.1.1 Common Problems and Solutions

Fault Name	Fault Descriptions	Corrective Actions
oc	**Over current** Abnormal increase in current.	1. Check if motor power corresponds with the AC motor drive output power. 2. Check the wiring connections to U/T1, V/T2, W/T3 for possible short circuits. 3. Check the wiring connections between the AC motor drive and motor for possible short circuits, also to ground. 4. Check for loose contacts between AC motor drive and motor. 5. Increase the Acceleration Time. 6. Check for possible excessive loading conditions at the motor. 7. If there are still any abnormal conditions when operating the AC motor drive after a short-circuit is removed and the other points above are checked, it should be sent back to manufacturer.
ou	**Over voltage** The DC bus voltage has exceeded its maximum allowable value.	1. Check if the input voltage falls within the rated AC motor drive input voltage range. 2. Check for possible voltage transients. 3. DC-bus over-voltage may also be caused by motor regeneration. Either increase the Decel. Time or add an optional brake resistor (and brake unit). 4. Check whether the required brake power is within the specified limits.

Fault Name	Fault Descriptions	Corrective Actions
oH 1	**Overheating** Heat sink temperature too high	1. Ensure that the ambient temperature falls within the specified temperature range. 2. Make sure that the ventilation holes are not obstructed. 3. Remove any foreign objects from the heatsinks and check for possible dirty heat sink fins. 4. Check the fan and clean it. 5. Provide enough spacing for adequate ventilation. (See chapter 1)
Lu	**Low voltage** The AC motor drive detects that the DC bus voltage has fallen below its minimum value.	1. Check whether the input voltage falls within the AC motor drive rated input voltage range. 2. Check for abnormal load in motor. 3. Check for correct wiring of input power to R-S-T (for 3-phase models) without phase loss.
oL	**Overload** The AC motor drive detects excessive drive output current. **NOTE: The AC motor drive can withstand up to 150% of the rated current for a maximum of 60 seconds.**	1. Check whether the motor is overloaded. 2. Reduce torque compensation setting in Pr.07.02. 3. Use the next higher power AC motor drive model.
oL 1	**Overload 1** Internal electronic overload trip	1. Check for possible motor overload. 2. Check electronic thermal overload setting. 3. Use a higher power motor. 4. Reduce the current level so that the drive output current does not exceed the value set by the Motor Rated Current Pr.07.00.
oL2	**Overload 2** Motor overload.	1. Reduce the motor load. 2. Adjust the over-torque detection setting to an appropriate setting (Pr.06.03 to Pr.06.05).
HPF 1	**CC (current clamp)**	Return to the factory.
HPF2	**OV hardware error**	
HPF3	**GFF hardware error**	
HPF4	**OC hardware error**	
bb	**External Base Block.** (Refer to Pr. 08.07)	1. When the external input terminal (B.B) is active, the AC motor drive output will be turned off. 2. Deactivate the external input terminal (B.B) to operate the AC motor drive again.

Fault Name	Fault Descriptions	Corrective Actions
ocA	**Over-current during acceleration**	1. Short-circuit at motor output: Check for possible poor insulation at the output lines. 2. Torque boost too high: Decrease the torque compensation setting in Pr.07.02. 3. Acceleration Time too short: Increase the Acceleration Time. 4. AC motor drive output power is too small: Replace the AC motor drive with the next higher power model.
ocd	**Over-current during deceleration**	1. Short-circuit at motor output: Check for possible poor insulation at the output line. 2. Deceleration Time too short: Increase the Deceleration Time. 3. AC motor drive output power is too small: Replace the AC motor drive with the next higher power model.
ocn	**Over-current during constant speed operation**	1. Short-circuit at motor output: Check for possible poor insulation at the output line. 2. Sudden increase in motor loading: Check for possible motor stall. 3. AC motor drive output power is too small: Replace the AC motor drive with the next higher power model.
EF	**External Fault**	1. When multi-function input terminals (MI3-MI9) are set to external fault, the AC motor drive stops output U, V and W. 2. Give RESET command after fault has been cleared.
cF 1.0	**Internal EEPROM can not be programmed.**	Return to the factory.
cF 1.1	**Internal EEPROM can not be programmed.**	Return to the factory.
cF2.0	**Internal EEPROM can not be read.**	1. Press RESET key to set all parameters to factory setting. 2. Return to the factory.
cF2.1	**Internal EEPROM can not be read.**	1. Press RESET key to set all parameters to factory setting. 2. Return to the factory.
cF3.0	**U-phase error**	Return to the factory.
cF3.1	**V-phase error**	
cF3.2	**W-phase error**	
cF3.3	**OV or LV**	
cF3.4	**Temperature sensor error**	

Fault Name	Fault Descriptions	Corrective Actions
GFF	**Ground fault**	When (one of) the output terminal(s) is grounded, short circuit current is more than 50% of AC motor drive rated current, the AC motor drive power module may be damaged. **NOTE: The short circuit protection is provided for AC motor drive protection, not for protection of the user.** 1. Check whether the IGBT power module is damaged. 2. Check for possible poor insulation at the output line.
cFA	**Auto accel/decel failure**	1. Check if the motor is suitable for operation by AC motor drive. 2. Check if the regenerative energy is too large. 3. Load may have changed suddenly.
cE--	**Communication Error**	1. Check the RS485 connection between the AC motor drive and RS485 master for loose wires and wiring to correct pins. 2. Check if the communication protocol, address, transmission speed, etc. are properly set. 3. Use the correct checksum calculation. 4. Please refer to group 9 in the chapter 5 for detail information.
codE	**Software protection failure**	Return to the factory.
AErr	**Analog signal error**	Check the wiring of ACI
FbE	**PID feedback signal error**	1. Check parameter settings (Pr.10.01) and AVI/ACI wiring. 2. Check for possible fault between system response time and the PID feedback signal detection time (Pr.10.08)
PHL	**Phase Loss**	Check input phase wiring for loose contacts.

6.1.2 Reset

There are three methods to reset the AC motor drive after solving the fault:

1. Press STOP RESET key on keypad.
2. Set external terminal to "RESET" (set one of Pr.04.05~Pr.04.08 to 05) and then set to be ON.
3. Send "RESET" command by communication.

NOTE

Make sure that RUN command or signal is OFF before executing RESET to prevent damage or personal injury due to immediate operation.

6.2 Maintenance and Inspections

Modern AC motor drives are based on solid-state electronics technology. Preventive maintenance is required to keep the AC motor drive in its optimal condition, and to ensure a long life. It is recommended to have a qualified technician perform a check-up of the AC motor drive regularly.

Daily Inspection:

Basic check-up items to detect if there were any abnormalities during operation are:

1. Whether the motors are operating as expected.
2. Whether the installation environment is abnormal.
3. Whether the cooling system is operating as expected.
4. Whether any irregular vibration or sound occurred during operation.
5. Whether the motors are overheating during operation.
6. Always check the input voltage of the AC drive with a Voltmeter.

Periodic Inspection:

Before the check-up, always turn off the AC input power and remove the cover. Wait at least 10 minutes after all display lamps have gone out, and then confirm that the capacitors have fully discharged by measuring the voltage between ⊕ ~ ⊖. It should be less than 25VDC.

DANGER!

1. Disconnect AC power before processing!
2. Only qualified personnel can install, wire and maintain AC motor drives. Please take off any metal objects, such as watches and rings, before operation. And only insulated tools are allowed.
3. Never reassemble internal components or wiring.
4. Prevent static electricity.

Periodical Maintenance

Ambient environment

Check Items	Methods and Criterion	Maintenance Period		
		Daily	Half Year	One Year
Check the ambient temperature, humidity, vibration and see if there are any dust, gas, oil or water drops	Visual inspection and measurement with equipment with standard specification	○		
Check if there are any dangerous objects in the environment	Visual inspection	○		

Voltage

Check Items	Methods and Criterion	Maintenance Period		
		Daily	Half Year	One Year
Check if the voltage of main circuit and control circuit is correct	Measure with multimeter with standard specification	○		

Keypad

Check Items	Methods and Criterion	Maintenance Period		
		Daily	Half Year	One Year
Is the display clear for reading?	Visual inspection	O		
Any missing characters?	Visual inspection	O		

Mechanical parts

Check Items	Methods and Criterion	Maintenance Period		
		Daily	Half Year	One Year
If there is any abnormal sound or vibration	Visual and aural inspection		O	
If there are any loose screws	Tighten the screws		O	
If any part is deformed or damaged	Visual inspection		O	
If there is any color change by overheating	Visual inspection		O	
If there is any dust or dirt	Visual inspection		O	

Main circuit

Check Items	Methods and Criterion	Maintenance Period		
		Daily	Half Year	One Year
If there are any loose or missing screws	Tighten or replace the screw	O		
If machine or insulator is deformed, cracked, damaged or with changed color change due to overheating or ageing	Visual inspection **NOTE: Please ignore the color change of copper plate**		O	
If there is any dust or dirt	Visual inspection		O	

Terminals and wiring of main circuit

Check Items	Methods and Criterion	Maintenance Period		
		Daily	Half Year	One Year
If the wiring shows change of color change or deformation due to overheat	Visual inspection		O	
If the insulation of wiring is damaged or the color has changed	Visual inspection		O	
If there is any damage	Visual inspection		O	

DC capacity of main circuit

Check Items	Methods and Criterion	Maintenance Period		
		Daily	Half Year	One Year
If there is any leakage of liquid, change of color, cracks or deformation	Visual inspection	O		
Measure static capacity when required	Static capacity ≥ initial value X 0.85		O	

Resistor of main circuit

Check Items	Methods and Criterion	Maintenance Period		
		Daily	Half Year	One Year
If there is any peculiar smell or insulator cracks due to overheating	Visual inspection, smell		O	
If there is any disconnection	Visual inspection or measure with multimeter after removing wiring between +/B1 ~ - Resistor value should be within ± 10%		O	

Transformer and reactor of main circuit

Check Items	Methods and Criterion	Maintenance Period		
		Daily	Half Year	One Year
If there is any abnormal vibration or peculiar smell	Visual, aural inspection and smell	O		

Magnetic contactor and relay of main circuit

Check Items	Methods and Criterion	Maintenance Period		
		Daily	Half Year	One Year
If there are any loose screws	Visual and aural inspection. Tighten screw if necessary.	O		
If the contact works correctly	Visual inspection	O		

Printed circuit board and connector of main circuit

Check Items	Methods and Criterion	Maintenance Period		
		Daily	Half Year	One Year
If there are any loose screws and connectors	Tighten the screws and press the connectors firmly in place.		O	
If there is any peculiar smell and color change	Visual inspection and smell		O	
If there is any crack, damage, deformation or corrosion	Visual inspection		O	
If there is any leaked liquid or deformation in capacitors	Visual inspection		O	

Cooling fan of cooling system

Check Items	Methods and Criterion	Maintenance Period		
		Daily	Half Year	One Year
If there is any abnormal sound or vibration	Visual, aural inspection and turn the fan with hand (turn off the power before operation) to see if it rotates smoothly			○
If there is any loose screw	Tighten the screw			○
If there is any change of color due to overheating	Change fan			○

Ventilation channel of cooling system

Check Items	Methods and Criterion	Maintenance Period		
		Daily	Half Year	One Year
If there is any obstruction in the heat sink, air intake or air outlet	Visual inspection		○	

Appendix A Specifications

There are 115V, 230V and 460V models in the VFD-EL series. For 115V models, it is 1-phase models. For 0.25 to 3HP of the 230V models, there are 1-phase/3-phase models. Refer to following specifications for details.

Voltage Class		115V Class		
Model Number VFD-XXXEL		002	004	007
Max. Applicable Motor Output (kW)		0.2	0.4	0.75
Max. Applicable Motor Output (hp)		0.25	0.5	1.0
Output Rating	Rated Output Capacity (kVA)	0.6	1.0	1.6
	Rated Output Current (A)	1.6	2.5	4.2
	Maximum Output Voltage (V)	3-Phase Proportional to Twice the Input Voltage		
	Output Frequency (Hz)	0.1~600 Hz		
	Carrier Frequency (kHz)	2-12		
Input Rating	Rated Input Current (A)	6.4	9	18
	Rated Voltage/Frequency	Single phase, 100-120V, 50/60Hz		
	Voltage Tolerance	± 10%(90~132 V)		
	Frequency Tolerance	± 5%(47~63 Hz)		
Cooling Method		Natural Cooling		
Weight (kg)		1.1	1.1	1.4

Voltage Class			230V Class					
Model Number VFD-XXXEL			002	004	007	015	022	037
Max. Applicable Motor Output (kW)			0.2	0.4	0.75	1.5	2.2	3.7
Max. Applicable Motor Output (hp)			0.25	0.5	1.0	2.0	3.0	5.0
Output Rating	Rated Output Capacity (kVA)		0.6	1.0	1.6	2.9	4.2	6.5
	Rated Output Current (A)		1.6	2.5	4.2	7.5	11.0	17
	Maximum Output Voltage (V)		3-Phase Proportional to Input Voltage					
	Output Frequency (Hz)		0.1~600 Hz					
	Carrier Frequency (kHz)		2-12					
Input Rating	XXXEL 21A	Rated Input Current (A)	4.9	6.5	9.5	15.7	24	--
		Rated Voltage/Frequency	1-phase, 200-240 V, 50/60Hz					
	XXXEL 23A	Rated Input Current (A)	1.9	2.7	4.9	9	15	20.6
		Rated Voltage/Frequency	3-phase, 200-240V, 50/60Hz					
	Voltage Tolerance		± 10%(180~264 V)					
	Frequency Tolerance		± 5%(47~63 Hz)					
Cooling Method			Natural Cooling		Fan Cooling			
Weight (kg)			1.2	1.2	1.2	1.7	1.7	1.7

Voltage Class		460V Class				
Model Number VFD-XXXEL		004	007	015	022	037
Max. Applicable Motor Output (kW)		0.4	0.75	1.5	2.2	3.7
Max. Applicable Motor Output (hp)		0.5	1.0	2.0	3.0	5.0
Output Rating	Rated Output Capacity (kVA)	1.2	2.0	3.3	4.4	6.8
	Rated Output Current (A)	1.5	2.5	4.2	5.5	8.2
	Maximum Output Voltage (V)	3-Phase Proportional to Input Voltage				
	Output Frequency (Hz)	0.1~600 Hz				
	Carrier Frequency (kHz)	2-12				
Input Rating	Rated Input Current (A)	1.8	3.2	4.3	7.1	9.0
	Rated Voltage/Frequency	3-phase, 380-480V, 50/60Hz				
	Voltage Tolerance	± 10%(342~528V)				
	Frequency Tolerance	± 5%(47~63Hz)				
Cooling Method		Natural Cooling		Fan Cooling		
Weight (kg)		1.2	1.2	1.2	1.7	1.7

General Specifications			
Control Characteristics	Control System		SPWM(Sinusoidal Pulse Width Modulation) control (V/f control)
	Frequency Setting Resolution		0.01Hz
	Output Frequency Resolution		0.01Hz
	Torque Characteristics		Including the auto-torque/auto-slip compensation; starting torque can be 150% at 5.0Hz
	Overload Endurance		150% of rated current for 1 minute
	Skip Frequency		Three zones, setting range 0.1-600Hz
	Accel/Decel Time		0.1 to 600 seconds (2 Independent settings for Accel/Decel time)
	Stall Prevention Level		Setting 20 to 250% of rated current
	DC Brake		Operation frequency 0.1-600.0Hz, output 0-100% rated current Start time 0-60 seconds, stop time 0-60 seconds
	Regenerated Brake Torque		Approx. 20% (up to 125% possible with optional brake resistor or externally mounted brake unit, 1-15hp (0.75-11kW) models have brake chopper built-in)
	V/f Pattern		Adjustable V/f pattern
Operating Characteristics	Frequency Setting	Keypad	Setting by ▲ ▼
		External Signal	Potentiometer-5kΩ/0.5W, 0 to +10VDC, 4 to 20mA, RS-485 interface; Multi-function Inputs 3 to 6 (15 steps, Jog, up/down)
	Operation Setting Signal	Keypad	Set by RUN and STOP
		External Signal	2 wires/3 wires ((MI1, MI2, MI3)), JOG operation, RS-485 serial interface (MODBUS), programmable logic controller
	Multi-function Input Signal		Multi-step selection 0 to 15, Jog, accel/decel inhibit, 2 accel/decel switches, counter, external Base Block, ACI/AVI selections, driver reset, UP/DOWN key settings, NPN/PNP input selection
	Multi-function Output Indication		AC drive operating, frequency attained, zero speed, Base Block, fault indication, overheat alarm, emergency stop and status selections of input terminals
	Analog Output Signal		Output frequency/current

General Specifications		
Operation Functions		AVR, accel/decel S-Curve, over-voltage/over-current stall prevention, 5 fault records, reverse inhibition, momentary power loss restart, DC brake, auto torque/slip compensation, auto tuning, adjustable carrier frequency, output frequency limits, parameter lock/reset, PID control, external counter, MODBUS communication, abnormal reset, abnormal re-start, power-saving, fan control, sleep/wake frequency, 1st/2nd frequency source selections, 1st/2nd frequency source combination, NPN/PNP selection
Protection Functions		Over voltage, over current, under voltage, external fault, overload, ground fault, overheating, electronic thermal, IGBT short circuit, PTC
Display Keypad (optional)		6-key, 7-segment LED with 4-digit, 4 status LEDs, master frequency, output frequency, output current, custom units, parameter values for setup and lock, faults, RUN, STOP, RESET, FWD/REV
Built-in EMI Filter		For 230V 1-phase and 460V 3-phase models.
Enviromental Conditions	Enclosure Rating	IP20
	Pollution Degree	2
	Installation Location	Altitude 1,000 m or lower, keep from corrosive gasses, liquid and dust
	Ambient Temperature	-10°C to 50°C (40°C for side-by-side mounting) Non-Condensing and not frozen
	Storage/ Transportation Temperature	-20 °C to 60 °C
	Ambient Humidity	Below 90% RH (non-condensing)
	Vibration	9.80665m/s^2 (1G) less than 20Hz, 5.88m/s2 (0.6G) at 20 to 50Hz
Approvals		

This page intentionally left blank

Appendix B Accessories

B.1 All Brake Resistors & Brake Units Used in AC Motor Drives

Note: Please only use DELTA resistors and recommended values. Other resistors and values will void Delta's warranty. Please contact your nearest Delta representative for use of special resistors. The brake unit should be at least 10 cm away from AC motor drive to avoid possible interference. Refer to the "Brake unit Module User Manual" for further details.

Voltage	Applicable Motor		Models	Full Load Torque KG-M	Equivalent Resistor Value (suggestion)	Brake Unit Model and No. of Units Used		Brake Resistors Model and No. of Units Used		Brake Torque 10%ED	Min. Equivalent Resistor Value for each AC Motor Drive
	hp	kW									
115V Series	0.25	0.2	VFD002EL11A	0.110	200W 250Ω	BUE-20015	1	BR200W250	1	320	200Ω
	0.5	0.4	VFD004EL11A	0.216	200W 250Ω	BUE-20015	1	BR200W250	1	170	100Ω
	1	0.75	VFD007EL11A	0.427	200W 150Ω	BUE-20015	1	BR200W150	1	140	80Ω
230V Series	0.25	0.2	VFD002EL21A/23A	0.110	200W 250Ω	BUE-20015	1	BR200W250	1	320	200Ω
	0.5	0.4	VFD004EL21A/23A	0.216	200W 250Ω	BUE-20015	1	BR200W250	1	170	100Ω
	1	0.75	VFD007EL21A/23A	0.427	200W 150Ω	BUE-20015	1	BR200W150	1	140	80Ω
	2	1.5	VFD015EL21A/23A	0.849	300W 100Ω	BUE-20015	1	BR300W100	-	107	80Ω
	3	2.2	VFD022EL21A/23A	1.262	600W 50Ω	BUE-20037	1	BR300W100	2	150	25Ω
	5	3.7	VFD037EL23A	2.080	900W 30Ω	BUE-20037	1	-	-	150	25Ω

Voltage	Applicable Motor hp	Applicable Motor kW	Models	Full Load Torque KG-M	Equivalent Resistor Value (suggestion)	Brake Unit Model BUE	Brake Unit No. of Units Used	Brake Resistors Model and No. of Units Used		Brake Torque 10%ED	Min. Equivalent Resistor Value for each AC Motor Drive
460V Series	0.5	0.4	VFD004EL43A	0.216	300W 400Ω	BUE-40015	1	BR300W400	1	400	400Ω
	1	0.75	VFD007EL43A	0.427	300W 400Ω	BUE-40015	1	BR300W400	1	200	200Ω
	2	1.5	VFD015EL43A	0.849	400W 300Ω	BUE-40015	1	BR200W150	2	140	160Ω
	3	2.2	VFD022EL43A	1.262	600W 200Ω	BUE-40037	1	BR300W400	2	150	100Ω
	5	3.7	VFD037EL43A	2.080	900W 120Ω	BUE-40037	1	-		150	100Ω

NOTE

1. Please select the brake unit and/or brake resistor according to the table. "-" means no Delta product. Please use the brake unit according to the Equivalent Resistor Value.
2. If damage to the drive or other equipment is due to the fact that the brake resistors and the brake modules in use are not provided by Delta, the warranty will be void.
3. Take into consideration the safety of the environment when installing the brake resistors.
4. If the minimum resistance value is to be utilized, consult local dealers for the calculation of the power in Watt.
5. Please select thermal relay trip contact to prevent resistor over load. Use the contact to switch power off to the AC motor drive!
6. When using more than 2 brake units, equivalent resistor value of parallel brake unit can't be less than the value in the column "Minimum Equivalent Resistor Value for Each AC Drive" (the right-most column in the table).
7. Please read the wiring information in the user manual of the brake unit thoroughly prior to installation and operation.
8. Definition for Brake Usage ED%

   Explanation: The definition of the barke usage ED(%) is for assurance of enough time for the brake unit and brake resistor to dissipate away heat generated by braking. When the brake resistor heats up, the resistance would increase with temperature, and brake torque would decrease accordingly. Suggested cycle time is one minute

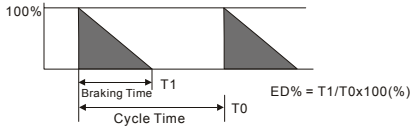

9. For safety reasons, install a thermal overload relay between brake unit and brake resistor. Together with the magnetic contactor (MC) in the mains supply circuit to the drive it offers protection in case of any malfunctioning. The purpose of installing the thermal overload relay is to protect the brake resistor against damage due to frequent brake or in case the brake unit is continuously on due to unusual high input voltage. Under these circumstances the thermal overload relay switches off the power to the drive. Never let the thermal overload relay switch off only the brake resistor as this will cause serious damage to the AC Motor Drive.

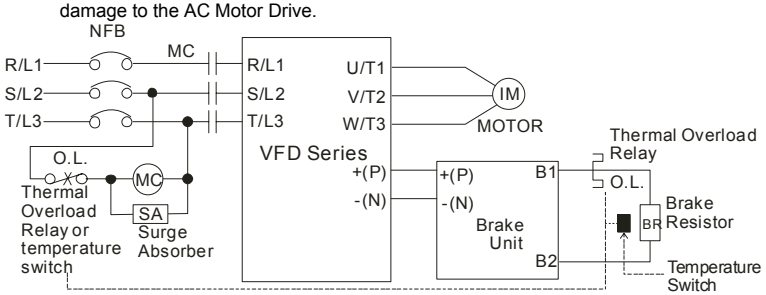

Note1: When using the AC drive with DC reactor, please refer to wiring diagram in the AC drive user manual for the wiring of terminal +(P) of Brake unit.

Note2: **Do NOT** wire terminal -(N) to the neutral point of power system.

B.1.1 Dimensions and Weights for Brake Resistors

(Dimensions are in millimeter)

Order P/N: BR080W200, BR080W750, BR300W100, BR300W250, BR300W400, BR400W150, BR400W040

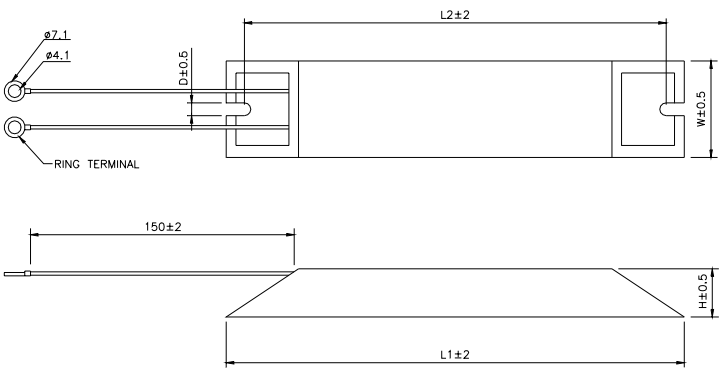

Model no.	L1	L2	H	D	W	Max. Weight (g)
BR080W200	140	125	20	5.3	60	160
BR080W750						
BR200W150	165	150	40	5.3		
BR200W250	165	150	40	5.3		
BR300W100	215	200	30	5.3	60	750
BR300W250						
BR300W400						
BR400W150	265	250	30	5.3	60	930
BR400W040						

Order P/N: BR500W030, BR500W100, BR1KW020, BR1KW075

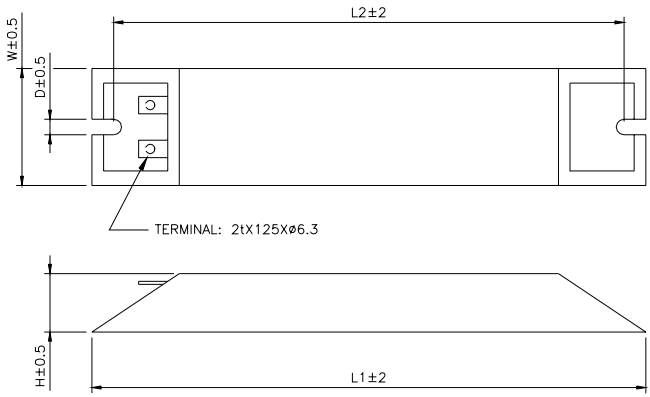

Model no.	L1	L2	H	D	W	Max. Weight (g)
BR500W030	335	320	30	5.3	60	1100
BR500W100						
BR1KW020	400	385	50	5.3	100	2800
BR1KW075						

Order P/N: BR1K0W050

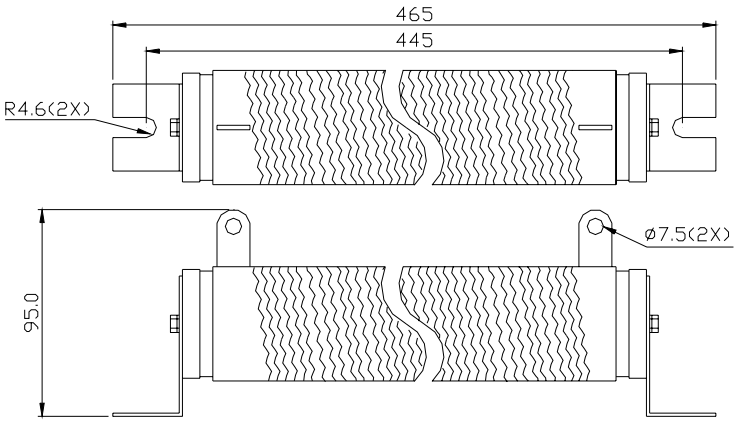

Order P/N: BR1K0W050, BR1K2W008, BR1K2W6P8, BR1K5W005, BR1K5W040

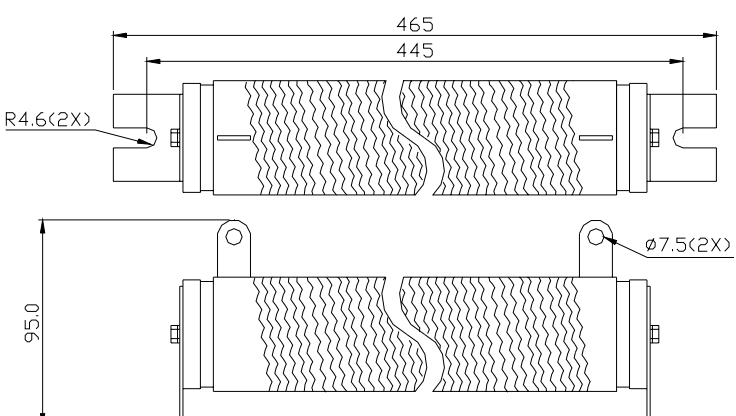

B.2 No Fuse Circuit Breaker Chart

For 1-phase/3-phase drives, the current rating of the breaker shall be within 2-4 times rated input current.

1-phase		3-phase	
Model	**Recommended no-fuse breaker (A)**	**Model**	**Recommended no-fuse breaker (A)**
VFD002EL11A	15	VFD002EL23A	5
VFD002EL21A	10	VFD004EL23A	5
VFD004EL11A	20	VFD004EL43A	5
VFD004EL21A	15	VFD007EL23A	10
VFD007EL11A	30	VFD007EL43A	5
VFD007EL21A	20	VFD015EL23A	20
VFD015EL21A	30	VFD015EL43A	10
VFD022EL21A	50	VFD022EL23A	30
		VFD022EL43A	15
		VFD037EL23A	40
		VFD037EL43A	20

B.3 Fuse Specification Chart

Smaller fuses than those shown in the table are permitted.

Model	I (A) Input	I (A) Output	Line Fuse	
			I (A)	Bussmann P/N
VFD002EL11A	6.4	1.6	15	JJN-15
VFD002EL21A	4.9	1.6	10	JJN-10
VFD002EL23A	1.9	1.6	5	JJN-6
VFD004EL11A	9	2.5	20	JJN-20
VFD004EL21A	6.5	2.5	15	JJN-15
VFD004EL23A	2.7	2.5	5	JJN-6
VFD004EL43A	1.8	1.5	5	JJS-6
VFD007EL11A	18	4.2	30	JJN-30
VFD007EL21A	9.3	4.2	20	JJN-20
VFD007EL23A	4.9	4.2	10	JJN-10
VFD007EL43A	3.2	2.5	5	JJS-6
VFD015EL21A	15.7	7.5	30	JJN-30
VFD015EL23A	9	7.5	20	JJN-20
VFD015EL43A	4.3	4.2	10	JJS-10
VFD022EL21A	24	11	50	JJN-50
VFD022EL23A	15	11	30	JJN-30
VFD022EL43A	7.1	5.5	15	JJS-15
VFD037EL23A	20.6	17	40	JJN-40
VFD037EL43A	9.0	8.2	20	JJS-20

B.4 AC Reactor

B.4.1 AC Input Reactor Recommended Value

230V, 50/60Hz, 1-Phase

kW	HP	Fundamental Amps	Max. continuous Amps	Inductance (mH)
				3~5% impedance
0.2	1/4	4	6	6.5
0.4	1/2	5	7.5	3
0.75	1	8	12	1.5
1.5	2	12	18	1.25
2.2	3	18	27	0.8

460V, 50/60Hz, 3-Phase

kW	HP	Fundamental Amps	Max. continuous Amps	Inductance (mH)	
				3% impedance	**5% impedance**
0.4	1/2	2	3	20	32
0.75	1	4	6	9	12
1.5	2	4	6	6.5	9
2.2	3	8	12	5	7.5
3.7	5	8	12	3	5

B.4.2 AC Output Reactor Recommended Value

115V/230V, 50/60Hz, 3-Phase

kW	HP	Fundamental Amps	Max. continuous Amps	Inductance (mH)	
				3% impedance	**5% impedance**
0.2	1/4	4	4	9	12
0.4	1/2	6	6	6.5	9
0.75	1	8	12	3	5
1.5	2	8	12	1.5	3
2.2	3	12	18	1.25	2.5
3.7	5	18	27	0.8	1.5

460V, 50/60Hz, 3-Phase

kW	HP	Fundamental Amps	Max. continuous Amps	Inductance (mH)	
				3% impedance	**5% impedance**
0.4	1/2	2	3	20	32
0.75	1	4	6	9	12
1.5	2	4	6	6.5	9
2.2	3	8	12	5	7.5
3.7	5	12	18	2.5	4.2

B.4.3 Applications

Connected in input circuit

Application 1	Question
When more than one AC motor drive is connected to the same mains power, and one of them is ON during operation.	When applying power to one of the AC motor drive, the charge current of the capacitors may cause voltage dip. The AC motor drive may be damaged when over current occurs during operation.

Correct wiring

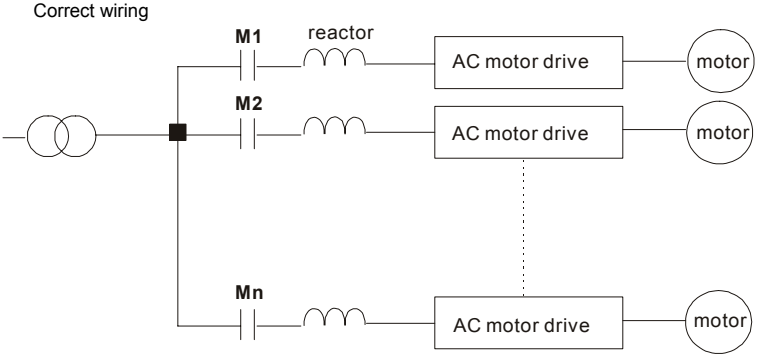

Application 2	Question
Silicon rectifier and AC motor drive are connected to the same power.	Switching spikes will be generated when the silicon rectifier switches on/off. These spikes may damage the mains circuit.

Correct wiring

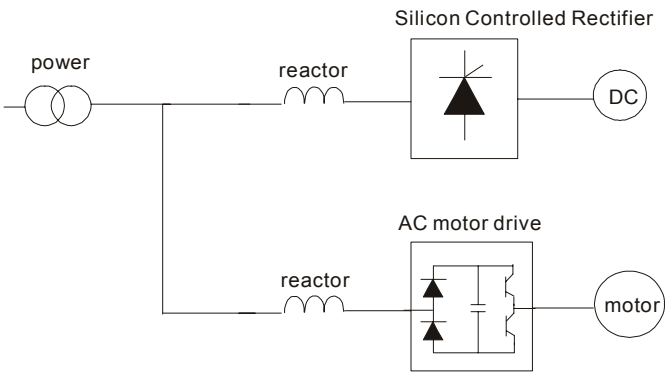

Application 3	Question
Used to improve the input power factor, to reduce harmonics and provide protection from AC line disturbances (surges, switching spikes, short interruptions, etc.). The AC line reactor should be installed when the power supply capacity is 500kVA or more and exceeds 6 times the inverter capacity, or the mains wiring distance $\leq$ 10m.	When the mains power capacity is too large, line impedance will be small and the charge current will be too high. This may damage AC motor drive due to higher rectifier temperature.

Correct wiring

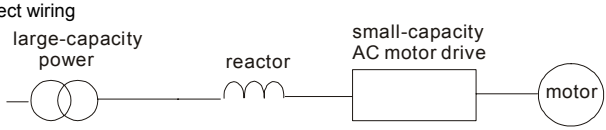

B.5 Zero Phase Reactor (RF220X00A)

Dimensions are in millimeter and (inch)

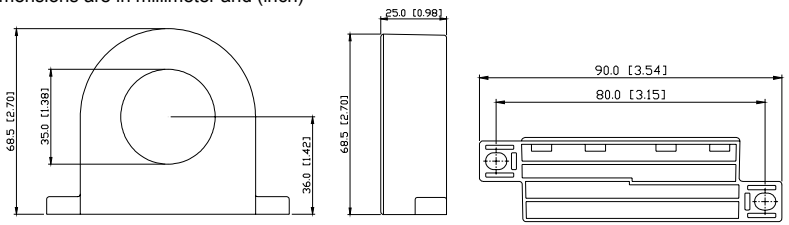

Cable type (**Note**)	Recommended Wire Size			Qty.	Wiring Method
	AWG	mm^2	Nominal (mm^2)		
Single-core	≦10	≦5.3	≦5.5	1	Diagram A
	≦2	≦33.6	≦38	4	Diagram B
Three-core	≦12	≦3.3	≦3.5	1	Diagram A
	≦1	≦42.4	≦50	4	Diagram B

Note: 600V Insulated unshielded Cable.

Diagram A
Please wind each wire 4 times around the core. The reactor must be put at inverter output as close as possible.

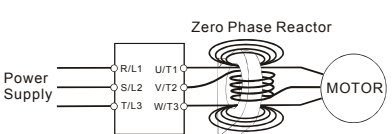

Diagram B
Please put all wires through 4 cores in series without winding.

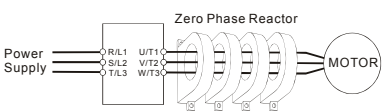

Note 1: The table above gives approximate wire size for the zero phase reactors but the selection is ultimately governed by the type and diameter of cable fitted i.e. the cable must fit through the center hole of zero phase reactors.

Note 2: Only the phase conductors should pass through, not the earth core or screen.

Note 3: When long motor output cables are used an output zero phase reactor may be required to reduce radiated emissions from the cable.

B.6 Remote Controller RC-01

Dimensions are in millimeter

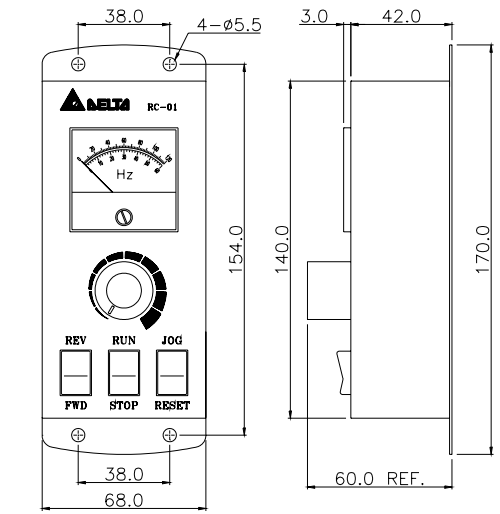

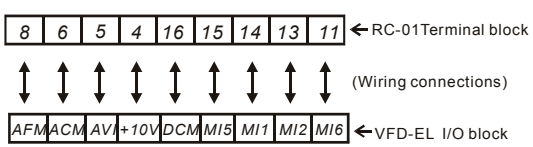

VFD-EL Programming:

Pr.02.00 set to 2

Pr.02.01 set to 1 (external controls)

Pr.04.04 set to 1 (setting Run/Stop and Fwd/Rev controls)

Pr.04.07 (MI5) set to 5 (External reset)

Pr.04.08 (MI6) set to 8 (JOG operation)

B.7 PU06

B.7.1 Description of the Digital Keypad VFD-PU06

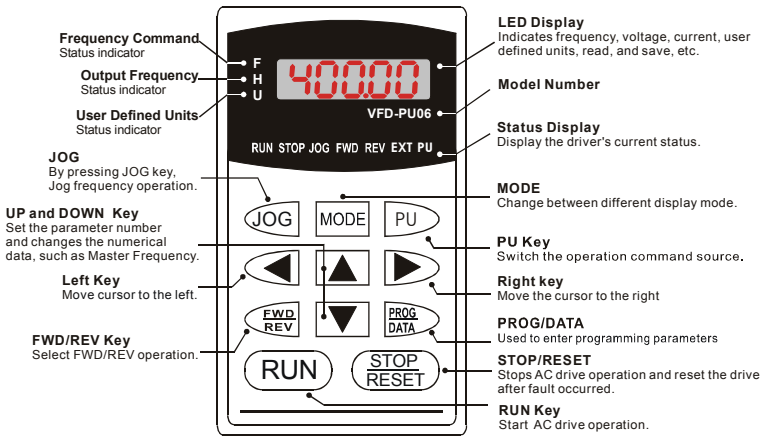

B.7.2 Explanation of Display Message

Display Message	Descriptions
	The AC motor drive Master Frequency Command.
	The Actual Operation Frequency present at terminals U, V, and W.
	The custom unit (u)
	The output current present at terminals U, V, and W.
	Press ▲ to change the mode to READ. Press PROG/DATA for about 2 sec or until it's flashing, read the parameters of AC drive to the digital keypad PU06. It can read 4 groups of parameters to PU06. (read 0 – read 3)
	Press ▲ to change the mode to SAVE. Press PROG/DATA for about 2 sec or until it's flashing, then write the parameters from the digital keypad PU06 to AC drive. If it has saved, it will show the type of AC motor drive.

Display Message	Descriptions
	The specified parameter setting.
	The actual value stored in the specified parameter.
	External Fault
	"End" displays for approximately 1 second if the entered input data have been accepted. After a parameter value has been set, the new value is automatically stored in memory. To modify an entry, use the ▲ or ▼ keys.
	"Err" displays if the input is invalid.
	Communication Error. Please check the AC motor drive user manual (Chapter 5, Group 9 Communication Parameter) for more details.

B.7.3 Operation Flow Chart

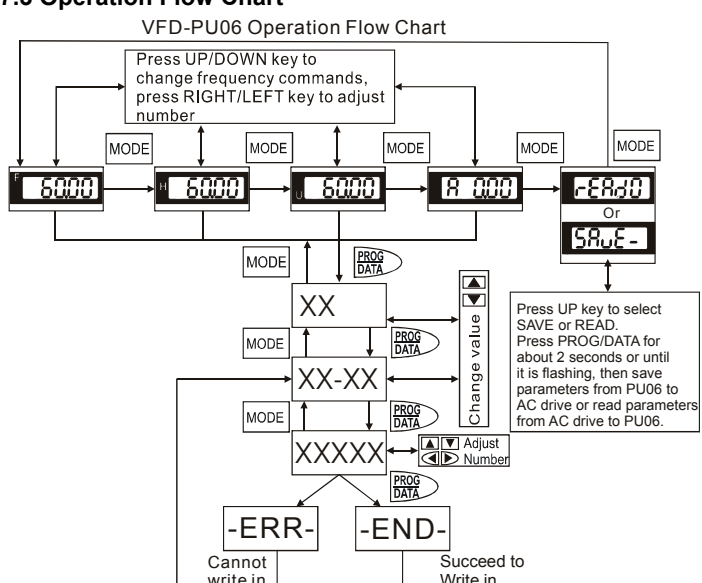

B.8 Fieldbus Modules

B.8.1 DeviceNet Communication Module (CME-DN01)

B.8.1.1 Panel Appearance and Dimensions

1. For RS-485 connection to VFD-EL 2. Communication port for connecting DeviceNet network 3. Address selector 4. Baud rate selector 5. Three LED status indicators for monitor. (Refer to the figure below)

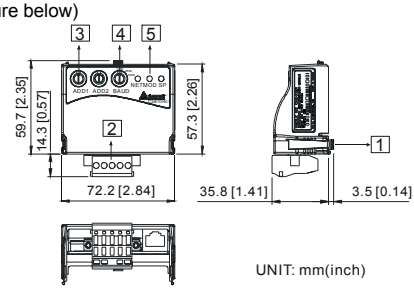

UNIT: mm(inch)

B.8.1.2 Wiring and Settings

Refer to following diagram for details.

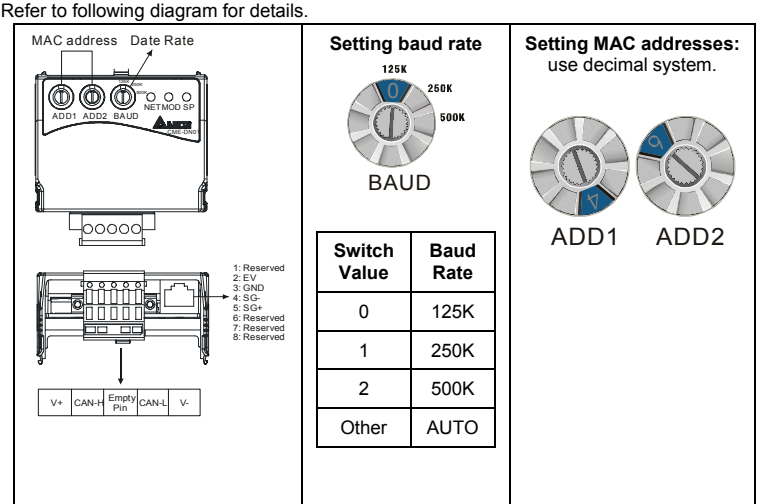

Switch Value	Baud Rate
0	125K
1	250K
2	500K
Other	AUTO

B.8.1.3 Power Supply

No external power is needed. Power is supplied via RS-485 port that is connected to VFD-EL. An 8 pins RJ-45 cable, which is packed together with this communication module, is used to connect the RS-485 port between VFD-EL and this communication module for power. This communication module will perform the function once it is connected. Refer to the following paragraph for LED indications.

B.8.1.4 LEDs Display

1. **SP:** Green LED means in normal condition, Red LED means abnormal condition.
2. **Module:** Green blinking LED means no I/O data transmission, Green steady LED means I/O data transmission OK.
   Red LED blinking or steady LED means module communication is abnormal.
3. **Network:** Green LED means DeviceNet communication is normal, Red LED means abnormal

B.8.2 LonWorks Communication Module (CME-LW01)

B.8.2.1 Introduction

Device CME-LW01 is used for communication interface between Modbus and LonTalk. CME-LW01 needs be configured via LonWorks network tool first, so that it can perform the function on LonWorks network. No need to set CME-LW01 address.
This manual provides instructions for the installation and setup for CME-LW01 that is used to communicate with Delta VFD-EL (firmware version of VFD-EL should conform with CME-LW01 according to the table below) via LonWorks Network.

B.8.2.2 Dimensions

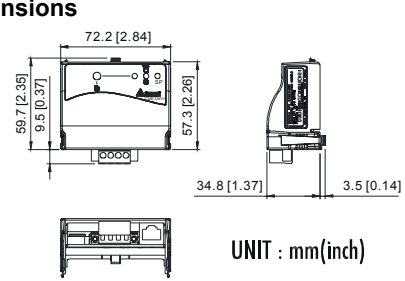

B.8.2.3 Specifications

Power supply: 16-30VDC, 750mW

Communication: Modbus in ASCII format, protocol: 9600, 7, N, 2

LonTalk: free topology with FTT-10A 78 Kbps.

LonTalk terminal: 4-pin terminals, wire gauge: 28-12 AWG, wire strip length: 7-8mm

RS-485 port: 8 pins with RJ-45

B.8.2.4 Wiring

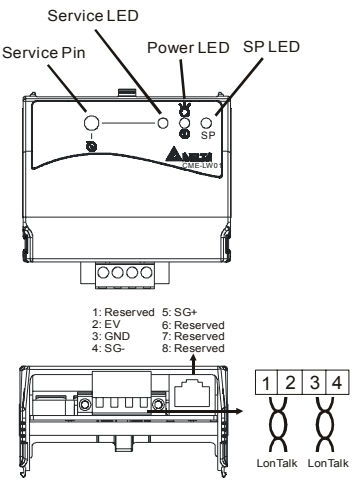

■ *Terminal definition for LonTalk system*

Terminal	Symbol	Function
1		These are twisted pair cables to connect to LonTalk system. Terminals 1 and 2 should be used as one group, and the same for terminals 3 and 4.
2		
3		
4		

B.8.2.5 LED Indications

There are three LEDs in front panel of CME-LW01. If the communication is normal, power LED, SP LED should be green (red LED means abnormal communication) and service LED should be OFF. If LEDs display do not match, refer to user manual for details.

B.8.3 Profibus Communication Module (CME-PD01)

B.8.3.1 Panel Appearance

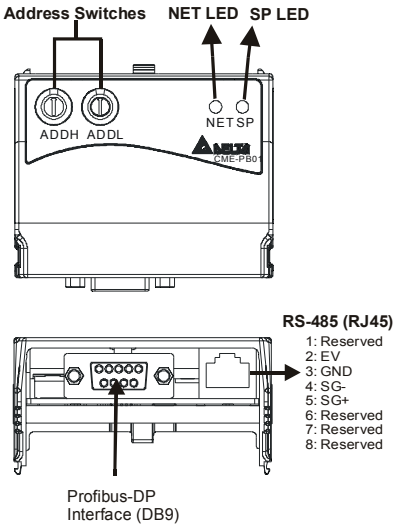

1. SP LED: Indicating the connection status between VFD-EL and CME-PD01.
2. NET LED: Indicating the connection status between CME-PD01 and PROFIBUS-DP.
3. Address Switches: Setting the address of CME-PD01 on PROFIBUS- DP network.
4. RS-485 Interface (RJ45): Connecting to VFD-EL, and supply power to CME-PD01.
5. PROFIBUS-DP Interface (DB9): 9-PIN connector that connects to PROFIBUS-DP network.
6. Extended Socket: 4-PIN socket that connects to PROFIBUS-DP network.

B.8.3.2 Dimensions

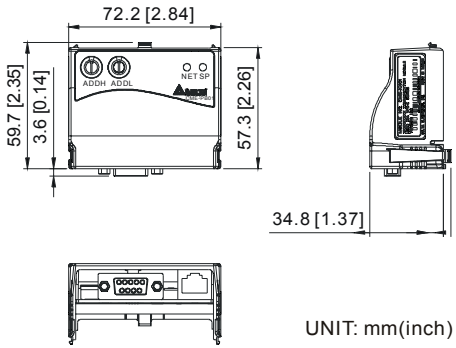

UNIT: mm(inch)

B.8.3.3 Parameters Settings in VFD-EL

	VFD-EL
Baud Rate 9600	Pr.09.01=1
RTU 8, N, 2	Pr.09.03=3
Freq. Source	Pr.02.00=4
Command Source	Pr.02.01=3

B.8.3.4 Power Supply

The power of CME-PD01 is supplied from VFD-EL. Please connect VFD-EL to CME-PD01 by using 8 pins RJ-45 cable, which is packed together with CME-PD01. After connection is completed, CME-PD01 is powered whenever power is applied to VFD-EL.

B.8.3.5 PROFIBUS Address



CME-PD01 has two rotary switches for the user to select the PROFIBUS address. The set value via 2 address switches, ADDH and ADDL, is in HEX format. ADDH sets the upper 4 bits, and ADDL sets the lower 4 bits of the PROFIBUS address.

Address	Meaning
1..0x7D	Valid PROFIBUS address
0 or 0x7E..0xFE	Invalid PROFIBUS address

B.8.4 CME-COP01 (CANopen)

CME-COP01 CANopen communication module is specifically for connecting to CANopen communication module of Delta VFD-EL AC motor drive.

B.8.4.1 Product Profile

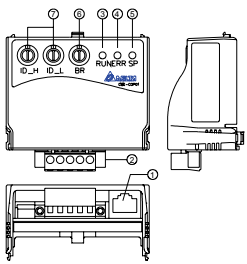

Unit: mm

①	COM port
②	CANopen connection port
③	RUN indicator
④	ERROR indicator
⑤	SP (Scan Port) indicator
⑥	Baud rate switch
⑦	Address switch

B.8.4.2 Specifications

CANopen Connection

Interface	Pluggable connector (5.08mm)
Transmission method	CAN
Transmission cable	2-wire twisted shielded cable
Electrical isolation	500V DC

Communication

Message type	Process Data Objects (PDO)	Baud rate	10 Kbps
	Service Data Object (SDO)		20 Kbps
	Synchronization (SYNC)		50 Kbps
	Emergency (EMCY)		125 Kbps
	Network Management (NMT)		250 Kbps
			500 Kbps
			800 Kbps
			1 Mbps
Product code	Delta VFD-EL AC motor drive 22		
Device type	402		
Vendor ID	477		

Environmental Specifications

Noise Immunity	ESD(IEC 61131-2, IEC 61000-4-2): 8KV Air Discharge EFT(IEC 61131-2, IEC 61000-4-4): Power Line: 2KV, Digital I/O: 1KV, Analog & Communication I/O: 1KV Damped-Oscillatory Wave: Power Line: 1KV, Digital I/O: 1KV RS(IEC 61131-2, IEC 61000-4-3): 26MHz ~ 1GHz, 10V/m
Environment	Operation: 0°C ~ 55°C (Temperature), 50 ~ 95% (Humidity), Pollution degree 2; Storage: -40°C ~ 70°C (Temperature), 5 ~ 95% (Humidity)
Vibration / Shock Resistance	Standard: IEC1131-2, IEC 68-2-6（TEST Fc/IEC1131-2 & IEC 68-2-27 (TEST Ea)
Certifications	Standard: IEC 61131-2,UL508

B.8.4.3 Components

Pin Definition on CANopen Connection Port

To connect with CANopen, use the connector enclosed with CME-COP01 or any connectors you can buy in the store for wiring.

Pin	Signal	Content
1	CAN_GND	Ground / 0 V / V-
2	CAN_L	Signal-
3	SHIELD	Shield
4	CAN_H	Signal+
5	-	Reserved

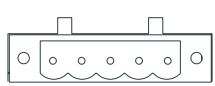

Baud Rate Setting

Rotary switch (BR) sets up the communication speed on CANopen network in hex. Setup range: 0 ~ 7 (8 ~F are forbidden)

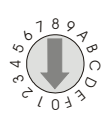

Example: If you need to set up the communication speed of CME-COP01 as 500K, simply switch BR to “5”.

BR Value	Baud rate	BR Value	Baud rate
0	10K	4	250K
1	20K	5	500K
2	50K	6	800K
3	125K	7	1M

MAC ID Setting

Rotary switches (ID_L and ID_H) set up the Node-ID on CANopen network in hex. Setup range: 00 ~ 7F (80 ~FF are forbidden)

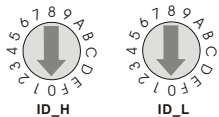

Example: If you need to set up the communication address of CME-COP01 as 26(1AH), simply switch ID_H to “1” and ID_L to “A”.

Switch Setting	Content
0 … 7F	Valid CANopen MAC ID setting
Other	Invalid CANopen MAC ID setting

B.8.4.4 LED Indicator Explanation & Troubleshooting

There are 3 LED indicators, RUN, ERROR and SP, on CME-COP01 to indicate the communication status of CME-COP01.

RUN LED

LED Status	State	Indication
OFF	No power	No power on CME-COP01 card
Single Flash (Green)	STOPPED	CME-COP01 is in STOPPED state
Blinking (Green)	PRE-OPERATIONAL	CME-COP01 is in the PRE-OPERATIONAL state
Green ON	OPERATIONAL	CME-COP01 is in the OPERATIONAL state
Red ON	Configuration error	Node-ID or Baud rate setting error

ERROR LED

LED Status	State	Indication
OFF	No error	CME-COP01 is working condition
Single Flash (Red)	Warning limit reached	At least one of error counter of the CANopen controller has reached or exceeded the warning level (too many error frames)
Double Flash (Red)	Error control event	A guard event or heartbeat event has occurred
Red ON	Bus-off	The CANopen controller is bus-off

SP LED

LED Status	State	Indication
OFF	No Power	No power on CME-COP01 card
LED Blinking (Red)	CRC check error	Check your communication setting in VFD-EL drives (19200,<8,N,2>,RTU)
Red ON	Connection failure/No connection	1. Check the connection between VFD-EL drive and CME-COP01 card is correct 2. Re-wire the VFD-EL connection and ensure that the wire specification is correct
Green ON	Normal	Communication is normal

LED Descriptions

State	Description
LED ON	Constantly on
LED OFF	Constantly off
LED blinking	Flash, on for 0.2s and off for 0.2s
LED single flash	On for 0.2s and off for 1s
LED double flash	On for 0.2s off for 0.2s, on for 0.2s and off for 1s

B.9 MKE-EP & DIN Rail

B.9.1 MKE-EP

EMC earthing plate for Shielding Cable

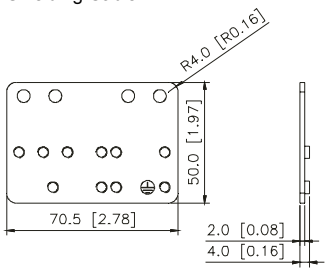

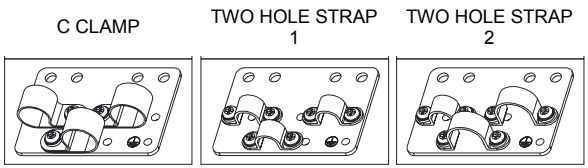

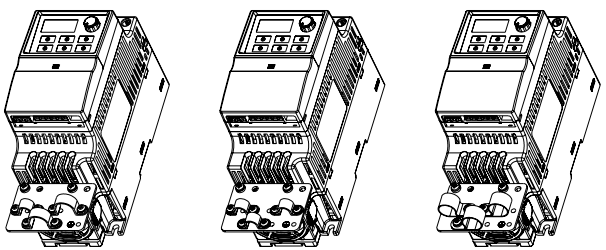

B.9.2 DIN Rail: MKEL-DRA (Only for frame A)

Dimensions

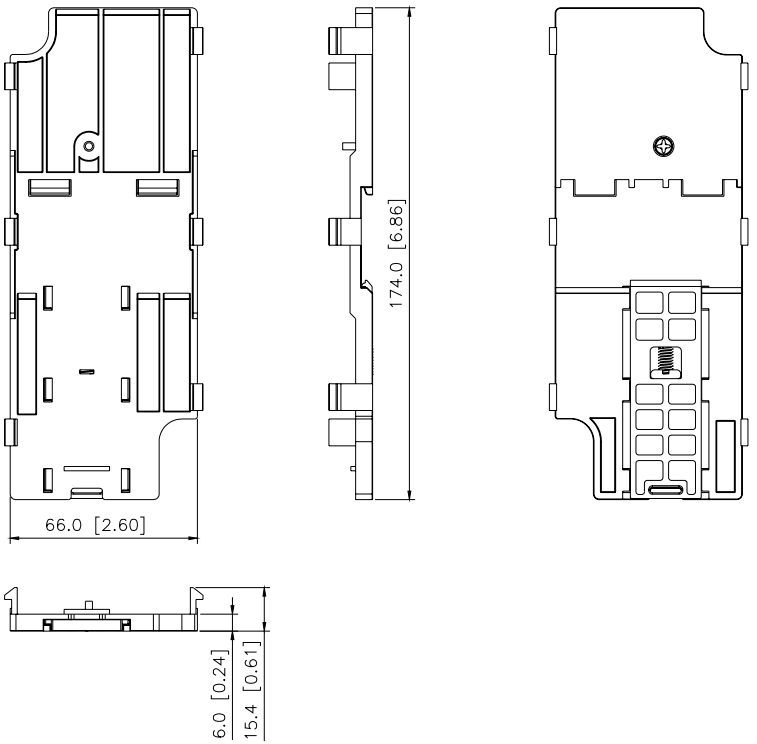

This DIN rail (MKEL-DRA) is only for frame A. For frame B, it is shipped with DIN rail (MKEL-DRB). Refer to chapter 1.3 for VFD-EL dimension.

NOTE

Frame A: VFD002EL11A/21A/23A, VFD004EL11A/21A/23A/43A, VFD007EL21A/23A/43A, VFD015EL23A/43A

Frame B: VFD007EL11A, VFD015EL21A, VFD022EL21A/23A/43A, VFD037EL23A/43A

Appendix C How to Select the Right AC Motor Drive

The choice of the right AC motor drive for the application is very important and has great influence on its lifetime. If the capacity of AC motor drive is too large, it cannot offer complete protection to the motor and motor maybe damaged. If the capacity of AC motor drive is too small, it cannot offer the required performance and the AC motor drive maybe damaged due to overloading.

But by simply selecting the AC motor drive of the same capacity as the motor, user application requirements cannot be met completely. Therefore, a designer should consider all the conditions, including load type, load speed, load characteristic, operation method, rated output, rated speed, power and the change of load capacity. The following table lists the factors you need to consider, depending on your requirements.

Item		**Related Specification**			
		Speed and torque characteristics	Time ratings	Overload capacity	Starting torque
Load type	Friction load and weight load Liquid (viscous) load Inertia load Load with power transmission	●			●
Load speed and torque characteristics	Constant torque Constant output Decreasing torque Decreasing output	●	●		
Load characteristics	Constant load Shock load Repetitive load High starting torque Low starting torque	●	●	●	●
Continuous operation, Short-time operation Long-time operation at medium/low speeds			●	●	
Maximum output current (instantaneous) Constant output current (continuous)		●		●	
Maximum frequency, Base frequency		●			
Power supply transformer capacity or percentage impedance Voltage fluctuations and unbalance Number of phases, single phase protection Frequency				●	●
Mechanical friction, losses in wiring				●	●
Duty cycle modification			●		

C.1 Capacity Formulas

1. When one AC motor drive operates one motor

The starting capacity should be less than 1.5x rated capacity of AC motor drive

The starting capacity=

$$\frac{k \times N}{973 \times \eta \times \cos\varphi}\left(T_L + \frac{GD^2}{375} \times \frac{N}{t_A}\right) \leq 1.5 \times the_capacity_of_AC_motor_drive(kVA)$$

2. When one AC motor drive operates more than one motor

2.1 The starting capacity should be less than the rated capacity of AC motor drive

- *Acceleration time ≦60 seconds*

The starting capacity=

$$\frac{k \times N}{\eta \times \cos\varphi}\left[n_T + n_S(k_S - 1)\right] = P_{C1}\left[1 + \frac{n_S}{n_T}(k_S - 1)\right] \leq 1.5 \times the_capacity_of_AC_motor_drive(kVA)$$

- *Acceleration time ≧60 seconds*

The starting capacity=

$$\frac{k \times N}{\eta \times \cos\varphi}\left[n_T + n_S(k_S - 1)\right] = P_{C1}\left[1 + \frac{n_S}{n_T}(k_S - 1)\right] \leq the_capacity_of_AC_motor_drive(kVA)$$

2.2 The current should be less than the rated current of AC motor drive(A)

- *Acceleration time ≦60 seconds*

$$n_T + I_M\left[1 + \frac{n_S}{n_T}(k_S - 1)\right] \leq 1.5 \times the_rated_current_of_AC_motor_drive(A)$$

- *Acceleration time ≧60 seconds*

$$n_T + I_M\left[1 + \frac{n_S}{n_T}(k_S - 1)\right] \leq the_rated_current_of_AC_motor_drive(A)$$

2.3 When it is running continuously

- The *requirement* of load capacity should be less than the capacity of AC motor drive(kVA)

  The requirement of load capacity=

$$\frac{k \times P_M}{\eta \times \cos\varphi} \le the_capacity_of_AC_motor_drive(kVA)$$

- *The motor capacity should be less than the capacity of AC motor drive*

$$k \times \sqrt{3} \times V_M \times I_M \times 10^{-3} \le the_capacity_of_AC_motor_drive(kVA)$$

- *The current should be less than the rated current of AC motor drive(A)*

$$k \times I_M \le the_rated_current_of_AC_motor_drive(A)$$

Symbol explanation

P_M	: Motor shaft output for load (kW)
η	: Motor efficiency (normally, approx. 0.85)
$\cos\varphi$	: Motor power factor (normally, approx. 0.75)
V_M	: Motor rated voltage(V)
I_M	: Motor rated current(A), for commercial power
k	: Correction factor calculated from current distortion factor (1.05-1.1, depending on PWM method)
P_{C1}	: Continuous motor capacity (kVA)
k_S	: Starting current/rated current of motor
n_T	: Number of motors in parallel
n_S	: Number of simultaneously started motors
GD^2	: Total inertia (GD^2) calculated back to motor shaft (kg m^2)
T_L	: Load torque
t_A	: Motor acceleration time
N	: Motor speed

C.2 General Precaution

Selection Note

1. When the AC Motor Drive is connected directly to a large-capacity power transformer (600kVA or above) or when a phase lead capacitor is switched, excess peak currents may occur in the power input circuit and the converter section may be damaged. To avoid this, use an AC input reactor (optional) before AC Motor Drive mains input to reduce the current and improve the input power efficiency.
2. When a special motor is used or more than one motor is driven in parallel with a single AC Motor Drive, select the AC Motor Drive current ≥1.25x(Sum of the motor rated currents).
3. The starting and accel./decel. characteristics of a motor are limited by the rated current and the overload protection of the AC Motor Drive. Compared to running the motor D.O.L. (Direct On-Line), a lower starting torque output with AC Motor Drive can be expected. If higher starting torque is required (such as for elevators, mixers, tooling machines, etc.) use an AC Motor Drive of higher capacity or increase the capacities for both the motor and the AC Motor Drive.
4. When an error occurs on the drive, a protective circuit will be activated and the AC Motor Drive output is turned off. Then the motor will coast to stop. For an emergency stop, an external mechanical brake is needed to quickly stop the motor.

Parameter Settings Note

1. The AC Motor Drive can be driven at an output frequency up to 400Hz (less for some models) with the digital keypad. Setting errors may create a dangerous situation. For safety, the use of the upper limit frequency function is strongly recommended.
2. High DC brake operating voltages and long operation time (at low frequencies) may cause overheating of the motor. In that case, forced external motor cooling is recommended.
3. Motor accel./decel. time is determined by motor rated torque, load torque, and load inertia.
4. If the stall prevention function is activated, the accel./decel. time is automatically extended to a length that the AC Motor Drive can handle. If the motor needs to decelerate within a certain time with high load inertia that can't be handled by the AC Motor Drive in the

required time, either use an external brake resistor and/or brake unit, depending on the model, (to shorten deceleration time only) or increase the capacity for both the motor and the AC Motor Drive.

C.3 How to Choose a Suitable Motor

Standard motor

When using the AC Motor Drive to operate a standard 3-phase induction motor, take the following precautions:

1. The energy loss is greater than for an inverter duty motor.
2. Avoid running motor at low speed for a long time. Under this condition, the motor temperature may rise above the motor rating due to limited airflow produced by the motor's fan. Consider external forced motor cooling.
3. When the standard motor operates at low speed for long time, the output load must be decreased.
4. The load tolerance of a standard motor is as follows:

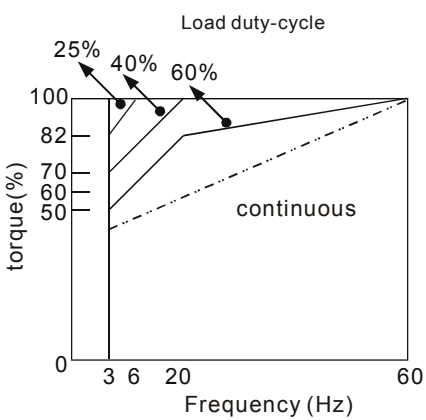

5. If 100% continuous torque is required at low speed, it may be necessary to use a special inverter duty motor.
6. Motor dynamic balance and rotor endurance should be considered once the operating speed exceeds the rated speed (60Hz) of a standard motor.

7. Motor torque characteristics vary when an AC Motor Drive instead of commercial power supply drives the motor. Check the load torque characteristics of the machine to be connected.
8. Because of the high carrier frequency PWM control of the VFD series, pay attention to the following motor vibration problems:
   - *Resonant mechanical vibration: anti-vibration (damping) rubbers should be used to mount equipment that runs at varying speed.*
   - *Motor imbalance: special care is required for operation at 50 or 60 Hz and higher frequency.*
   - *To avoid resonances, use the Skip frequencies.*
9. The motor fan will be very noisy when the motor speed exceeds 50 or 60Hz.

Special motors:

1. Pole-changing (Dahlander) motor:
   The rated current is differs from that of a standard motor. Please check before operation and select the capacity of the AC motor drive carefully. When changing the pole number the motor needs to be stopped first. If over current occurs during operation or regenerative voltage is too high, please let the motor free run to stop (coast).
2. Submersible motor:
   The rated current is higher than that of a standard motor. Please check before operation and choose the capacity of the AC motor drive carefully. With long motor cable between AC motor drive and motor, available motor torque is reduced.
3. Explosion-proof (Ex) motor:
   Needs to be installed in a safe place and the wiring should comply with the (Ex) requirements. Delta AC Motor Drives are not suitable for (Ex) areas with special precautions.
4. Gear reduction motor:
   The lubricating method of reduction gearbox and speed range for continuous operation will be different and depending on brand. The lubricating function for operating long time at low speed and for high-speed operation needs to be considered carefully.
5. Synchronous motor:
   The rated current and starting current are higher than for standard motors. Please check before operation and choose the capacity of the AC motor drive carefully. When the AC

motor drive operates more than one motor, please pay attention to starting and changing the motor.

Power Transmission Mechanism

Pay attention to reduced lubrication when operating gear reduction motors, gearboxes, belts and chains, etc. over longer periods at low speeds. At high speeds of 50/60Hz and above, lifetime reducing noises and vibrations may occur.

Motor torque

The torque characteristics of a motor operated by an AC motor drive and commercial mains power are different.

Below you'll find the torque-speed characteristics of a standard motor (4-pole, 15kW):

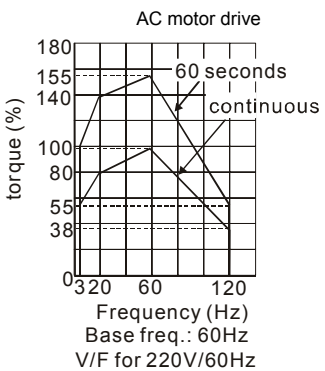

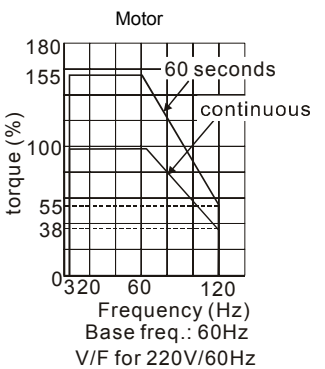

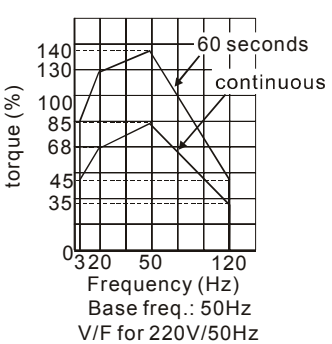

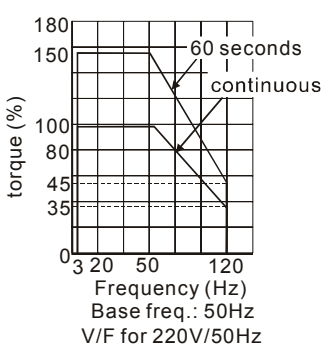

This page intentionally left blank.