PRODUCT DATASHEET
DL ALU DN 200 35 W 4000 K IP44/IP20 WT

DOWNLIGHT ALU | Downlight luminaires with aluminum housing



AREAS OF APPLICATION

- Direct replacement for luminaires with compact fluorescent lamps
- General illumination
- Public areas
- Stairways
- Corridors
- Foyers
- Shops

PRODUCT BENEFITS

- High luminous efficacy
- Energy savings up to 60 % (compared to luminaires that use CFL lamps)
- Very homogenous light
- Functional design
- Easy installation with fast connection
- External driver for extended flexibility (compatible with selected DALI drivers)
- 5 years guarantee

PRODUCT FEATURES

- Diameter of required ceiling cut-out: 150 mm or 200 mm (depending on version)
- Type of protection: IP44

© 2020, LEDVANCE GmbH. All rights reserved.

TECHNICAL DATA

Electrical data

Nominal wattage	35.00 W
Operating mode	External LED driver
Nominal voltage	220...240 V
Power factor λ	>0.90
Mains frequency	50/60 Hz
Max. no. of lum. on circuit break. B16 A	83
Max. no. of lum. on circuit break. C10 A	64
Max. no. of lum. on circuit break. C16 A	102
Inrush current	9.0 A
Total harmonic distortion	< 20 %

Luminaire control gear data

ECG - Length	138 mm
ECG - Width	45 mm
Ouput current	27...42 mA
ECG - Output ripple current	<35 %

Photometrical data

Color temperature	4000 K
Luminous flux	3150 lm
Luminous efficacy	90 lm/W
Standard deviation of color matching	≤6 sdcm
Light color (designation)	Cool White
Color rendering index Ra	>80

Light technical data

Beam angle	100.00 °

© 2020, LEDVANCE GmbH. All rights reserved.

Dimensions & weight

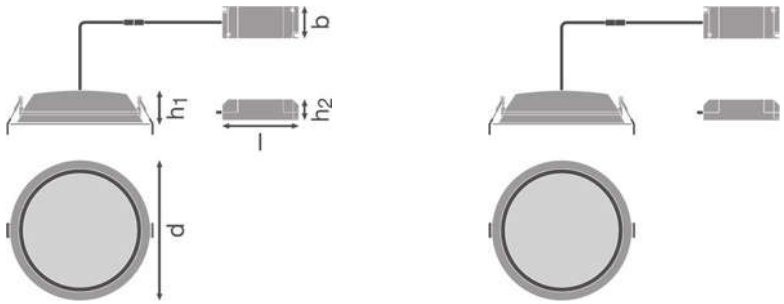

Diameter	215.0 mm
Height	61.0 mm
Product weight	600.00 g
Mounting diameter	200.0 mm

Colors & materials

Body material	Aluminum
Product color	White
Housing color	White
Cover material	Polymethylmethacrylate (PMMA)

Temperatures & operating conditions

Ambient temperature range	-20…+45 °C

Lifespan

Number of switching cycles	100000
Lifespan L70/B50 at 25 °C	50000 h
Lifespan L80/B10 at 25 °C	45000 h
Lifespan L90/B10 at 25 °C	30000 h

Additional product data

Mounting type	Recessed
Mounting location	Ceiling

Capabilities

Dimmable	No
Type of connection	Screw terminal, 2-Pole (L,N)
LED module replaceable	Not replaceable

© 2020, LEDVANCE GmbH. All rights reserved.

Certificates & standards

Protection class IK (shock resistance)	IK02
Glow Wire Test according to IEC 60695-2-12	650 °C
Photobio. safety group acc. to EN62471	RG 0
Protection class	II
Type of protection	IP44/IP20
Standards	CE/CB/ENEC/TÜV SÜD/RoHS

Logistical data

Temperature range at storage	-20...+80 °C

Light Distribution

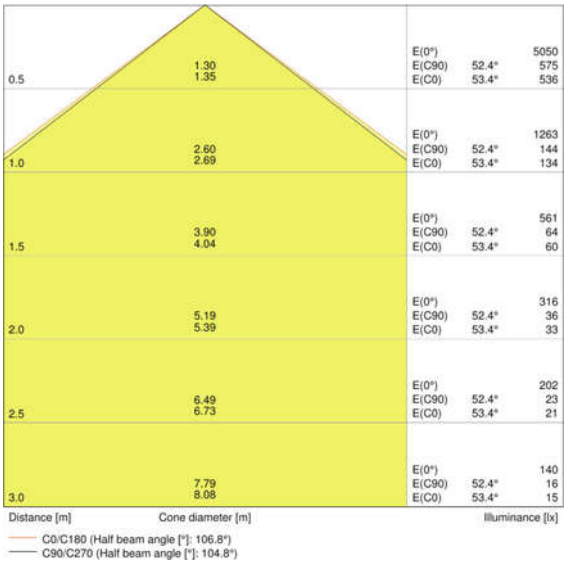

LDC typ cone

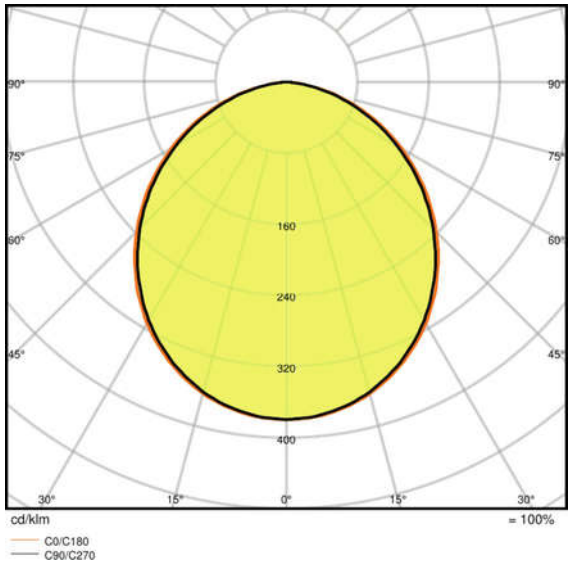

LDC typ polar

LOGISTICAL DATA

Product code	Packaging unit (Pieces/Unit)	Dimensions (length x width x height)	Gross weight	Volume
4058075091573	Folding carton box 1	225 mm x 225 mm x 110 mm	775.00 g	5.57 dm³
4058075091580	Shipping carton box 8	462 mm x 462 mm x 240 mm	6860.00 g	51.23 dm³

The mentioned product code describes the smallest quantity unit which can be ordered. One shipping unit can contain one or more single products. When placing an order, for the quantity please enter single or multiples of a shipping unit.

© 2020, LEDVANCE GmbH. All rights reserved.

ADDITIONAL CATALOG INFORMATION

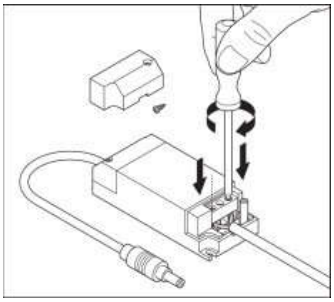

REFERENCES / LINKS

For Guarantee see

- www.ledvance.com/guarantee

DISCLAIMER

Subject to change without notice. Errors and omission excepted. Always make sure to use the most recent release.

© 2020, LEDVANCE GmbH. All rights reserved.