

PSEN opII mirror column

PILZ
THE SPIRIT OF SAFETY

- PSEN sensor technology

Operating Manual-1004629-EN-02

This document is the original document.

All rights to this documentation are reserved by Pilz GmbH & Co. KG. Copies may be made for the user's internal purposes. Suggestions and comments for improving this documentation will be gratefully received.

Source code from third-party manufacturers or open source software has been used for some components. The relevant licence information is available on the Internet on the Pilz homepage.

Pilz®, PIT®, PMI®, PNOZ®, Primo®, PSEN®, PSS®, PVIS®, SafetyBUS p®, SafetyEYE®, SafetyNET p®, the spirit of safety® are registered and protected trademarks of Pilz GmbH & Co. KG in some countries.


SD means Secure Digital

Introduction	**4**
Validity of documentation	4
Using the documentation	4
Definition of symbols	4
Safety	**5**
Intended use	5
Safety regulations	7
Use of qualified personnel	7
Warranty and liability	8
Disposal	8
Overview	**8**
Unit structure	8
Typical application	9
Adjustable base unit	9
Installation	**10**
Important information	10
Installation without adjustable base unit	11
Installation with adjustable base unit	14
Inspections and cleaning	**17**
Regular check	17
Inspection procedure	17
Cleaning	18
Dimensions	**19**
Technical details Order no. 632032-632034	**21**
Technical details Order no. 632035-632036	**22**
Technical details for adjustable base unit Order no. 632037	**23**
Technical details for floor anchor Order no. 632012	**24**
Order reference	**24**
Mirror column set	24
Mirror columns	24
Accessories	25

Introduction

Validity of documentation

This documentation is valid for the product PSEN opII mirror column. It is valid until new documentation is published.

This operating manual explains the function and operation, describes the installation and provides guidelines on how to connect the product.

Using the documentation

This document is intended for instruction. Only install and commission the product if you have read and understood this document. The document should be retained for future reference.

Definition of symbols

Information that is particularly important is identified as follows:



DANGER!

This warning must be heeded! It warns of a hazardous situation that poses an immediate threat of serious injury and death and indicates preventive measures that can be taken.



WARNING!

This warning must be heeded! It warns of a hazardous situation that could lead to serious injury and death and indicates preventive measures that can be taken.



CAUTION!

This refers to a hazard that can lead to a less serious or minor injury plus material damage, and also provides information on preventive measures that can be taken.



NOTICE

This describes a situation in which the product or devices could be damaged and also provides information on preventive measures that can be taken. It also highlights areas within the text that are of particular importance.

INFORMATION

This gives advice on applications and provides information on special features.

Safety

Intended use

PSEN opII mirror column may only be used to divert the infrared light beams of a safety light curtain.

The operating range of a safety light curtain is reduced when a deviating mirror is used.

- Max. operating range reduction on PSEN opt II is 10 % per deviating mirror

PSEN opII mirror column may only be used with the safety light curtains stated.

Mirror column	Suitable safety light curtain series	Heights
PSEN opII Mirror Column-060	PSEN op2B-2-xxx/1	050
	PSEN op4B-2-xxx/1	050
	PSEN op2H-s-30-xxx/1	015, 030, 045
	PSEN op4F-s-14-xxx/1	015, 030, 045
	PSEN op4H-s-30-xxx/1	015, 030, 045
	PSEN opII3F-s-14-xxx	015, 030, 045
	PSEN opII3H-s-30-xxx	015, 030, 045
	PSEN opII4F-s-14-xxx	015, 030, 045
	PSEN opII4H-s-30-xxx	015, 030, 045
PSEN opII Mirror Column-090	PSEN op2B-2-xxx/1	080
	PSEN op4B-2-xxx/1	080
	PSEN op2H-s-30-xxx/1	060, 075
	PSEN op4F-s-14-xxx/1	060, 075
	PSEN op4H-s-30-xxx/1	060, 075
	PSEN opII3F-s-14-xxx	060, 075
	PSEN opII3H-s-30-xxx	060, 075
	PSEN opII4F-s-14-xxx	060, 075
	PSEN opII4H-s-30-xxx	060, 075

Mirror column	Suitable safety light curtain series	Heights
PSEN opII Mirror Column-120	PSEN op2B-2-xxx/1	090
	PSEN op4B-2-xxx/1	090
	PSEN op2H-s-30-xxx/1	090, 105
	PSEN op4F-s-14-xxx/1	090, 105
	PSEN op4H-s-30-xxx/1	090, 105
	PSEN opII3F-s-14-xxx	090, 105
	PSEN opII3H-s-30-xxx	090, 105
	PSEN opII4F-s-14-xxx	090, 105
	PSEN opII4H-s-30-xxx	090, 105
PSEN opII Mirror Column-165	PSEN op2B-2-xxx/1	120
	PSEN op4B-2-xxx/1	120
	PSEN op2H-s-30-xxx/1	120, 135, 150
	PSEN op4F-s-14-xxx/1	120, 135, 150
	PSEN op4H-s-30-xxx/1	120, 135, 150
	PSEN opII3F-s-14-xxx	120, 135, 150
	PSEN opII3H-s-30-xxx	120, 135, 150
	PSEN opII4F-s-14-xxx	120, 135, 150
	PSEN opII4H-s-30-xxx	120, 135, 150
PSEN opII Mirror Column-195	PSEN op2H-s-30-xxx/1	165, 180
	PSEN op4F-s-14-xxx/1	165, 180
	PSEN op4H-s-30-xxx/1	165, 180
	PSEN opII3F-s-14-xxx	165, 180
	PSEN opII3H-s-30-xxx	165, 180
	PSEN opII4F-s-14-xxx	165, 180
	PSEN opII4H-s-30-xxx	165, 180

The following is deemed improper use in particular:

- Any component, technical or electrical modification to the product
- Use of the product outside the areas described in this manual
- Use of the product outside the technical details (see chapter entitled "Technical details [21]").

Foreseeable misuse

Deviating mirrors may not be used under the following conditions:

- If the deviating mirrors are dirty.
- If drops, dew or frost form on the deviating mirrors.
- If the layout would imitate a retroreflective light curtain, as in the following diagram.

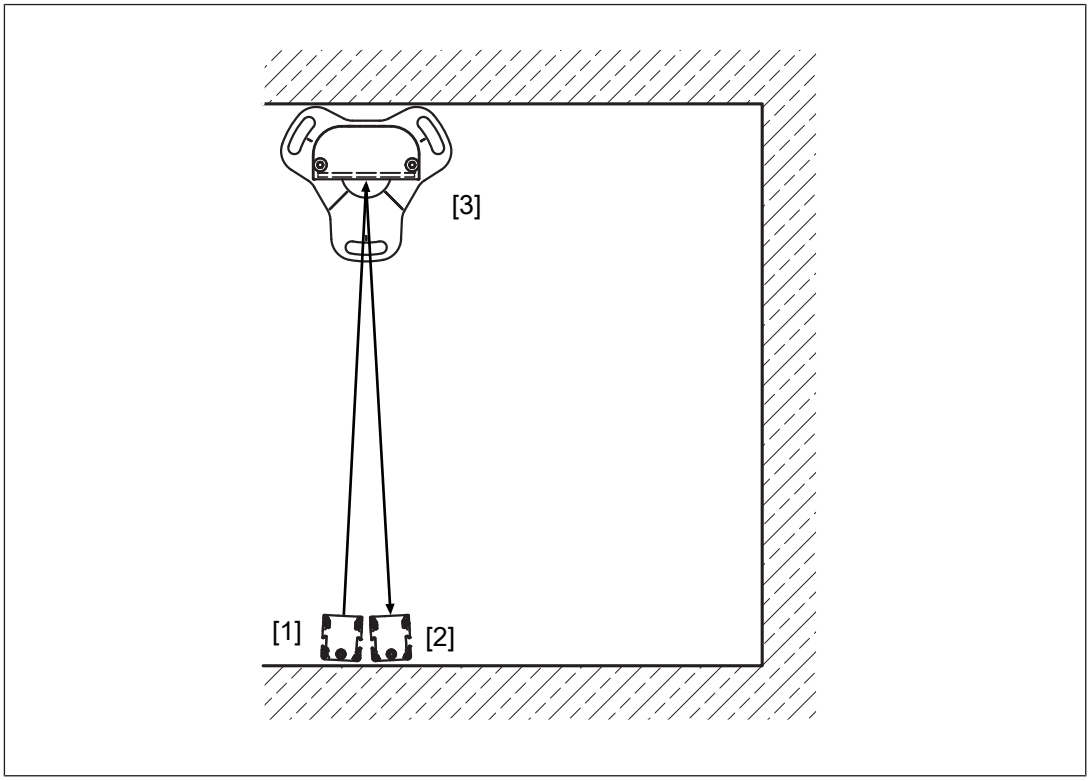

Legend

[1] Transmitter

[2] Receiver

[3] Mirror column

Safety regulations

Use of qualified personnel

The products may only be assembled, installed, programmed, commissioned, operated, maintained and decommissioned by competent persons.

A competent person is a qualified and knowledgeable person who, because of their training, experience and current professional activity, has the specialist knowledge required. To be able to inspect, assess and operate devices, systems and machines, the person has to be informed of the state of the art and the applicable national, European and international laws, directives and standards.

It is the company's responsibility only to employ personnel who

- Are familiar with the basic regulations concerning health and safety / accident prevention,
- Have read and understood the information provided in the section entitled Safety
- Have a good knowledge of the generic and specialist standards applicable to the specific application.

Warranty and liability

All claims to warranty and liability will be rendered invalid if

- The product was used contrary to the purpose for which it is intended,
- Damage can be attributed to not having followed the guidelines in the manual,
- Operating personnel are not suitably qualified,
- Any type of modification has been made (e.g. exchanging components on the PCB boards, soldering work etc.).

Disposal

- When decommissioning, please comply with local regulations regarding the disposal of electronic devices (e.g. Electrical and Electronic Equipment Act).

Overview

Unit structure

The PSEN opII mirror column is supplied with a protective foil. This is used to

- Protect the glass mirror during transportation
- Improve the visibility of the laser point on the laser alignment aid.

PSEN opII mirror column consists of a glass mirror, which is fixed to an aluminium protective housing. To guarantee stability, the PSEN opII mirror column must be connected to the floor via the flange plate or adjustable base unit, using heavy duty dowels.

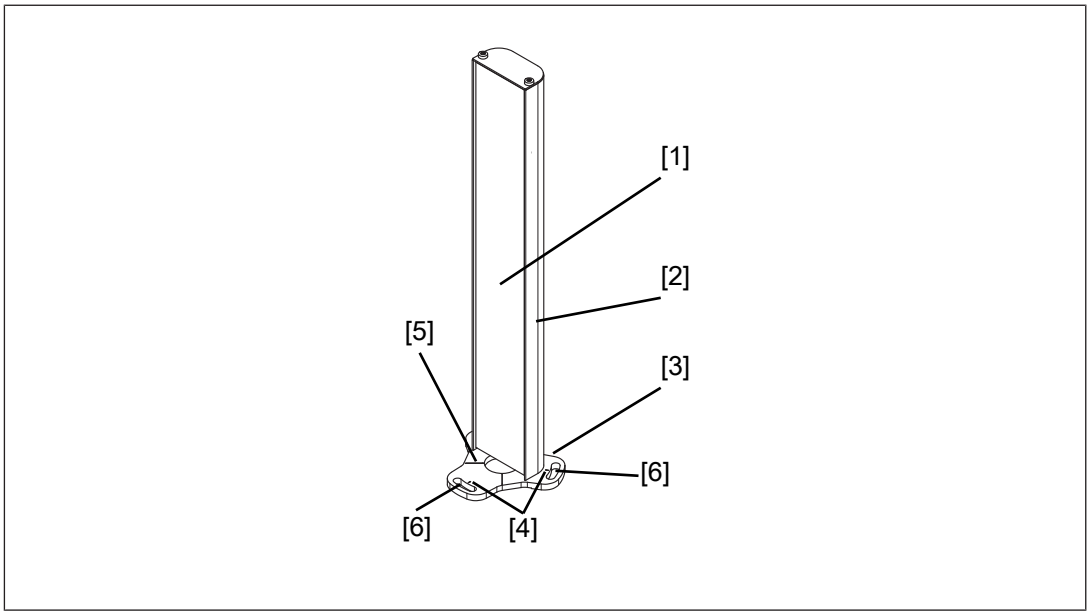

Legend

[1] Deviating mirror

[2] Profile for protecting the deviating mirror

[3] Base plate for floor attachment (mounted on the mirror column)

[4] Marking to identify the drilling position for the floor anchors

[5] Marking to align the mirror in the protected field

[6] Slot holes for attaching the base plate to the floor anchors

INFORMATION

For a simple, precise alignment of the safety light curtain and deviating mirror we recommend that you use the laser alignment aid PSEN opII Laserpointer (see Order reference [25]).

Typical application

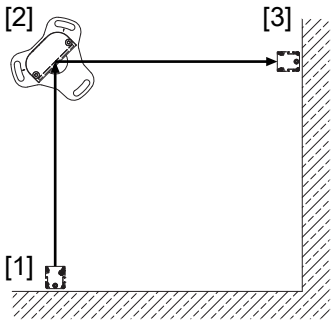

[1]	Transmitter
[2]	First deviating mirror
[3]	Receiver

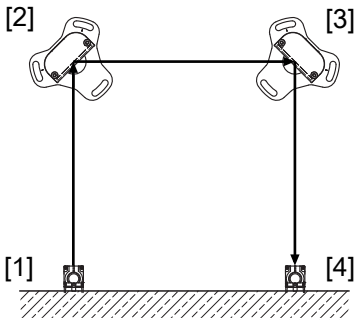

[1]	Transmitter
[2]	First deviating mirror
[3]	Second deviating mirror
[4]	Receiver

Adjustable base unit

Pilz recommends that you use the adjustable base unit, available as an accessory (PSEN opII adjustable base unit, see Order reference [25]).

The PSEN opII adjustable base unit is required for correct assembly under the following conditions:

- When used over long distances
- When used on uneven floors

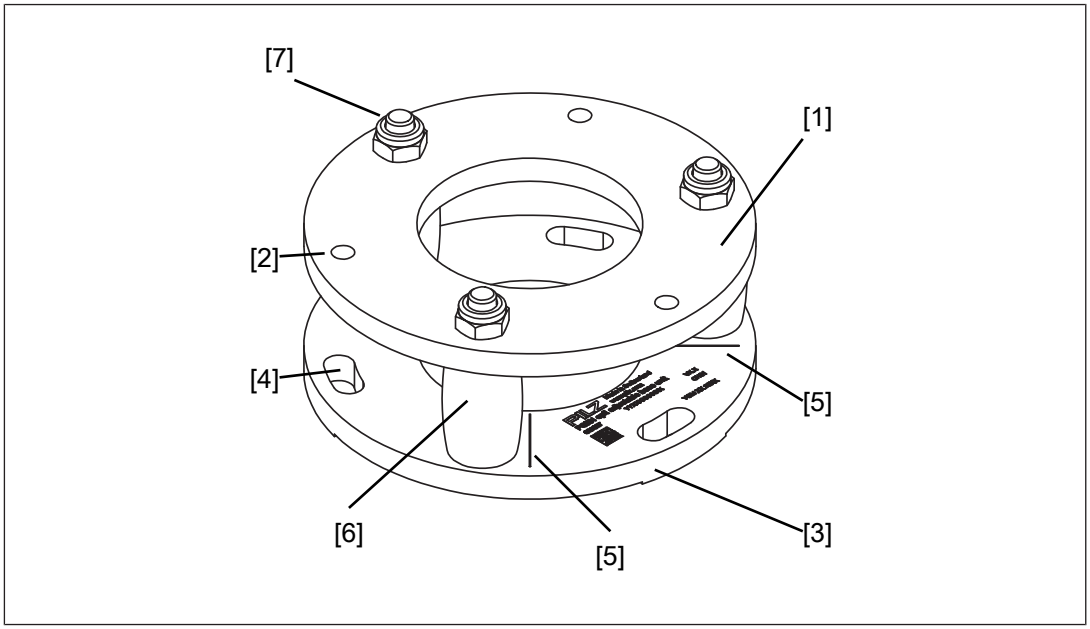

Legend

[1] Cover plate
[2] Retainer for mirror column
[3] Base plate for attachment to floor
[4] Slot hole for attaching the adjustable base unit to the floor
[5] Markings to align the mirror in the protected field
[6] Spring element
[7] Adjusting nut

Scope of supply of adjustable base unit

- 1 adjustable base unit
- 3 locking screws to attach the deviating mirror to the adjustable base unit

Installation

Important information

PSEN opII mirror column has a dead zone on the side of the base unit (see diagram).

Calculating the dead zone:

Distance from the safety light curtain to the floor - (protected field height of safety light curtain - effective protected field height of safety light curtain)/2

Make sure that the safety curtain's protected field is completely covered by the deviating mirror.

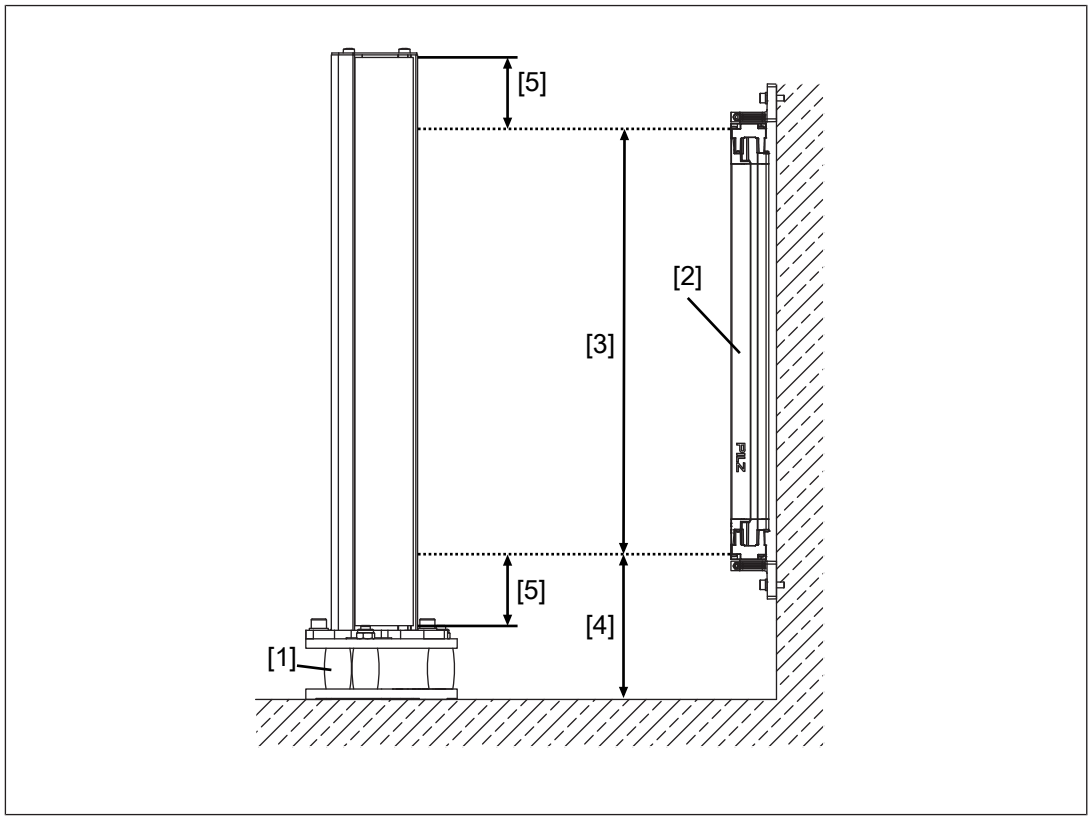

Legend

[1] Adjustable base unit

[2] Safety light curtain

[3] Protected field

[4] Dead zone of PSEN opII mirror column

[5] Distance from the end of the PSEN opII mirror column to the end of the safety light curtain's protected field

- Make sure that the floor anchor that you are using is suitable and has been approved for the floor properties and environmental conditions.

  Refer to the manufacturer's specifications regarding the use of the floor anchor.

  The floor anchor supplied as an accessory (see Order references accessories [📖 25]) is manufactured by Hilti AG, manufacturer's designation: Stud anchor HST3 M10x100 40/20 BW.
- Make sure that the PSEN opII mirror column is protected from collisions.
- Make sure that there is no leverage affecting the PSEN opII mirror column (e.g. due to a person or object leaning against the PSEN opII mirror column).

Installation without adjustable base unit

- Required tool:
  - Spirit level
  - Floor anchor ⌀ 10 mm (PSEN screw set mirror column, see Order reference for accessories [📖 25] or another floor anchor)
  - Tool to attach the floor anchors

Procedure:

1. Determine the position of the protected field and the position of the safety light curtain's transmitter and receiver.
2. Install the safety light curtain's transmitter and receiver as stated in the operating manual for the safety light curtain.
3. Determine the position of the mirror column(s) at the edges of the protected field and align the mirror column approximately using the markings on the base plate (see diagram).

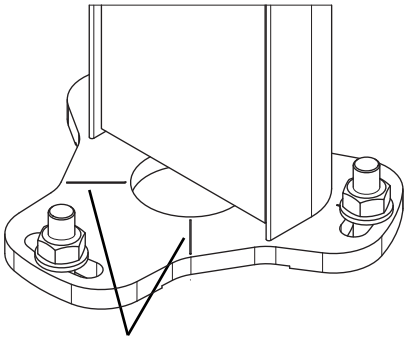

Legend

[1] Markings for aligning the deviating mirror to the protected field

4. Mark the position of the floor anchors on the floor.

   Note the information given for minimum distances and angle (see diagram) in the Technical details [📖 21].

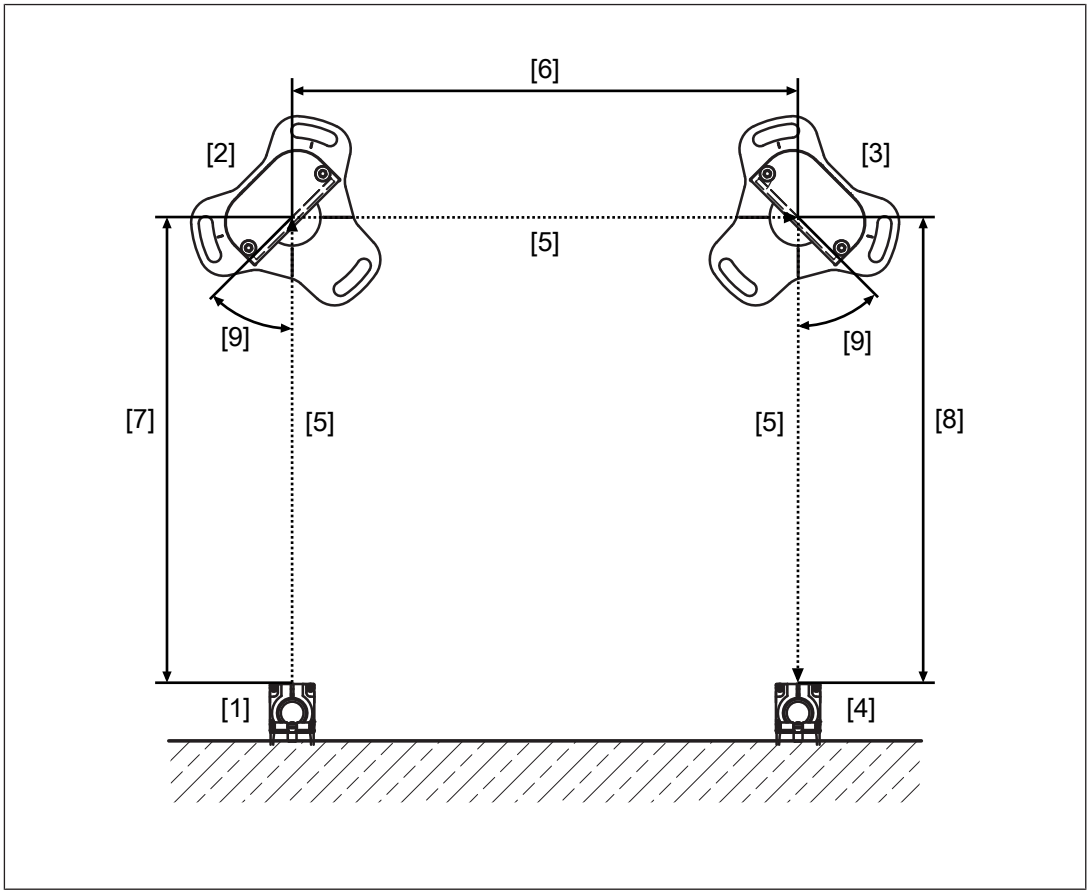

Legend

[1] Transmitter
[2] First deviating mirror
[3] Second deviating mirror
[4] Receiver
[5] Path of light beam
[6] Distance between two deviating mirrors
[7] Distance from the transmitter to the first deviating mirror
[8] Distance from the second deviating mirror to the receiver
[9] Angle between transmitter/receiver and deviating mirror

5. Make sure that there are no opaque objects between the safety light curtain's transmitter/receiver and the mirror column.

   The full light beam from the safety light curtain's transmitter must be able to strike the deviating mirror.

   The full light beam reflected by the deviating mirror must be able to strike the safety light curtain's receiver.

   Even a small displacement of the PSEN opII mirror column can cause a misalignment and a malfunction of the safety light curtain.

6. Drill holes in the floor for the floor anchors and insert the floor anchors.

7. Connect the mirror column to the floor anchors. Attach the mirror column.
8. Use the spirit level to vertically align the safety light curtain's transmitter.
9. Place a laser alignment aid on to the safety light curtain's transmitter.
10. Rotate the safety light curtain's transmitter until the laser point strikes at the same height as the PSEN opII mirror column.
11. Attach the safety light curtain's transmitter.
12. Remove the protective foil from the first PSEN opII mirror column.
13. Rotate the PSEN opII mirror column until the laser point strikes at the same height as the next PSEN opII mirror column/the safety light curtain's receiver.
14. Tighten the fastening for the mirror column to the floor anchors evenly. Avoid using a jerky motion when tightening (e.g. impact wrench).
15. Remove the protective foil from the second PSEN opII mirror column.
16. Repeat the alignment on all the deviating mirrors. Once the last deviating mirror has been aligned, the laser point on the laser alignment aid must strike the receiver at the same height.
17. Place the laser alignment aid on to the safety light curtain's receiver.
18. Rotate the safety light curtain's receiver until the laser point strikes at the same height as the last PSEN opII mirror column.
19. Attach the safety light curtain's receiver and remove the laser alignment aid.

Installation with adjustable base unit

- Required tool:
  - Allen key 8 mm
  - Hexagonal wrench SW 17 mm
  - Spirit level
  - Floor anchor ⌀ 10 mm (PSEN screw set mirror column, see Order reference for accessories [📖 25] or another floor anchor)

Procedure:

1. Determine the position of the protected field and the position of the safety light curtain's transmitter and receiver.
2. Install the safety light curtain's transmitter and receiver as stated in the operating manual for the safety light curtain.
3. Determine the position of the mirror column(s) at the edges of the protected field and align the mirror column approximately using the markings on the base plate of the adjustable base unit (see diagram). Note the information given for minimum distances and angles in the Technical details [📖 21]. Mark the position of the floor anchors on the floor.

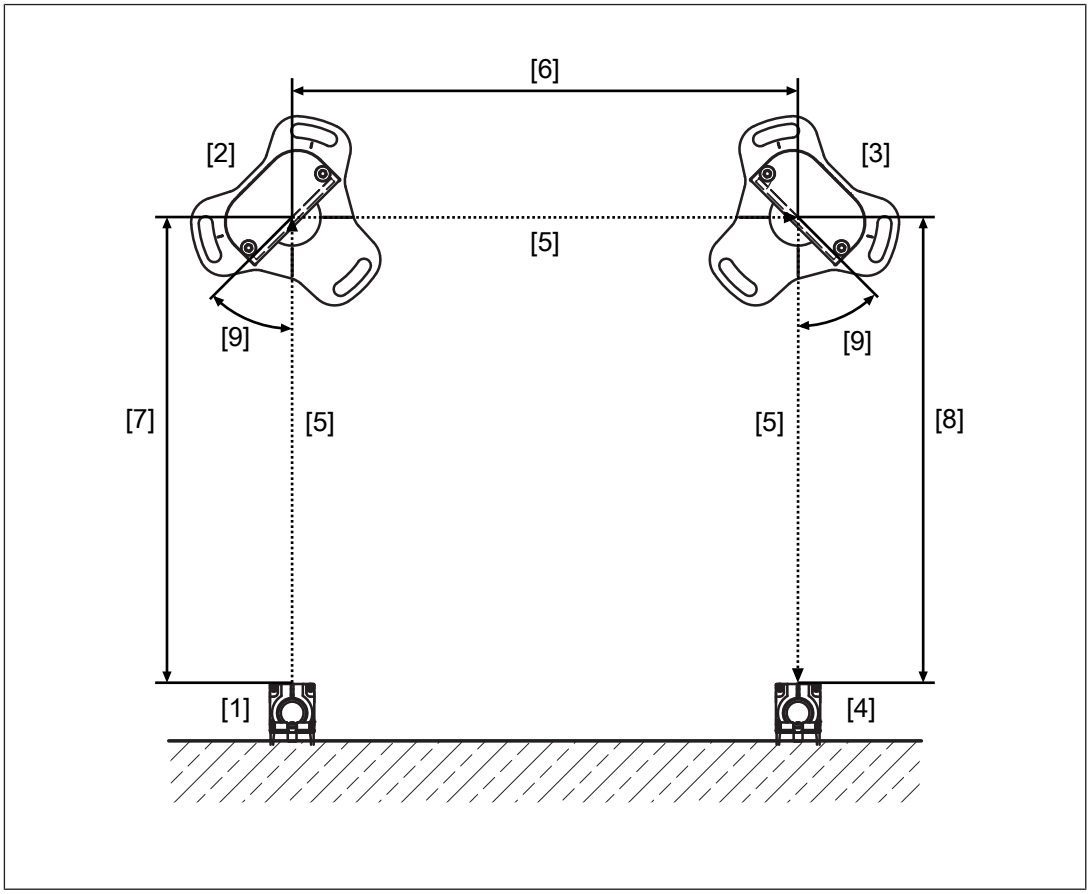

Legend

[1] Transmitter
[2] First deviating mirror
[3] Second deviating mirror
[4] Receiver
[5] Path of light beam
[6] Distance between two deviating mirrors
[7] Distance from the transmitter to the first deviating mirror
[8] Distance from the second deviating mirror to the receiver
[9] Angle between transmitter/receiver and deviating mirror

4. Make sure that there are no opaque objects between the safety light curtain's transmitter/receiver and the mirror column.

   The full light beam from the safety light curtain's transmitter must be able to strike the deviating mirror.

   The full light beam reflected by the deviating mirror must be able to strike the safety light curtain's receiver.

   Even a small displacement of the PSEN opII mirror column can cause a misalignment and a malfunction of the safety light curtain.

5. Drill holes in the floor for the floor anchors and insert the floor anchors.

6. Place the adjustable base unit on the floor anchors and tighten the nuts evenly.
7. Place the mirror column on the adjustable base unit and use the locking screws to attach the mirror column (see diagram).

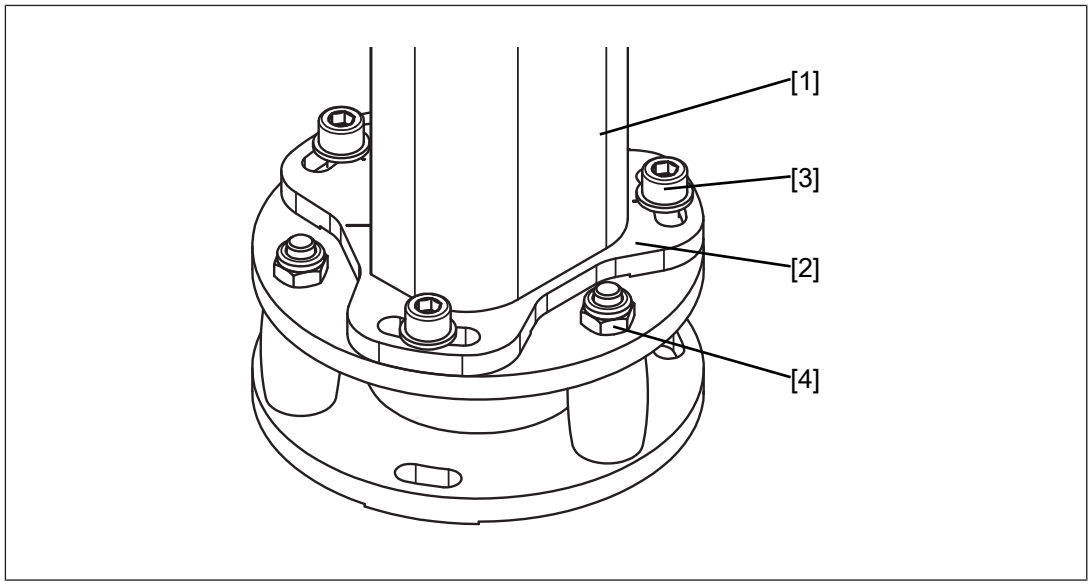

Legend

[1] Mirror column

[2] Mirror column's base plate

[3] Locking screws for attaching the mirror column to the adjustable base unit and for rotational alignment

[4] Adjusting nuts for vertical alignment of the mirror column

8. Use the spirit level to vertically align the safety light curtain's transmitter.
9. Use the spirit level for vertical alignment of the PSEN opII mirror column. You can use the adjusting nuts to correct the gradient.
   Tilt the mirror column in one direction = tighten the adjusting nut on the side towards which it should tilt
10. Place a laser alignment aid on to the safety light curtain's transmitter.
11. Rotate the safety light curtain's transmitter until the laser point strikes at the same height as the PSEN opII mirror column.
12. Attach the safety light curtain's transmitter.
13. Remove the protective foil from the first PSEN opII mirror column.
14. Rotate the PSEN opII mirror column on the adjustable base unit until the laser point strikes at the same height as the next PSEN opII mirror column/the safety light curtain's receiver.
15. Tighten the fastening for the mirror column on the adjustable base unit evenly to 18 Nm.
16. Remove the protective foil from the second PSEN opII mirror column.

17. Repeat the alignment on all the deviating mirrors. Once the last deviating mirror has been aligned, the laser point on the laser alignment aid must strike the receiver at the same height.
18. Place the laser alignment aid on to the safety light curtain's receiver.
19. Rotate the safety light curtain's receiver until the laser point strikes at the same height as the last PSEN opII mirror column.
20. Attach the safety light curtain's receiver and remove the laser alignment aid.

Inspections and cleaning

Regular check

Regular checks can bring to light changes to the plant/machine, safeguards and ambient conditions.

Pilz recommends a six monthly inspection.

Inspections should also be carried out:

- When commissioning the plant
- Any time the plant is modified
- If there is any suspicion that the mirror column is damaged

Inspection procedure

Move the test rod slowly through the protected field (see diagram):

- Between the transmitter and the first deviating mirror
- Between two deviating mirrors
- Between the second deviating mirror and the receiver

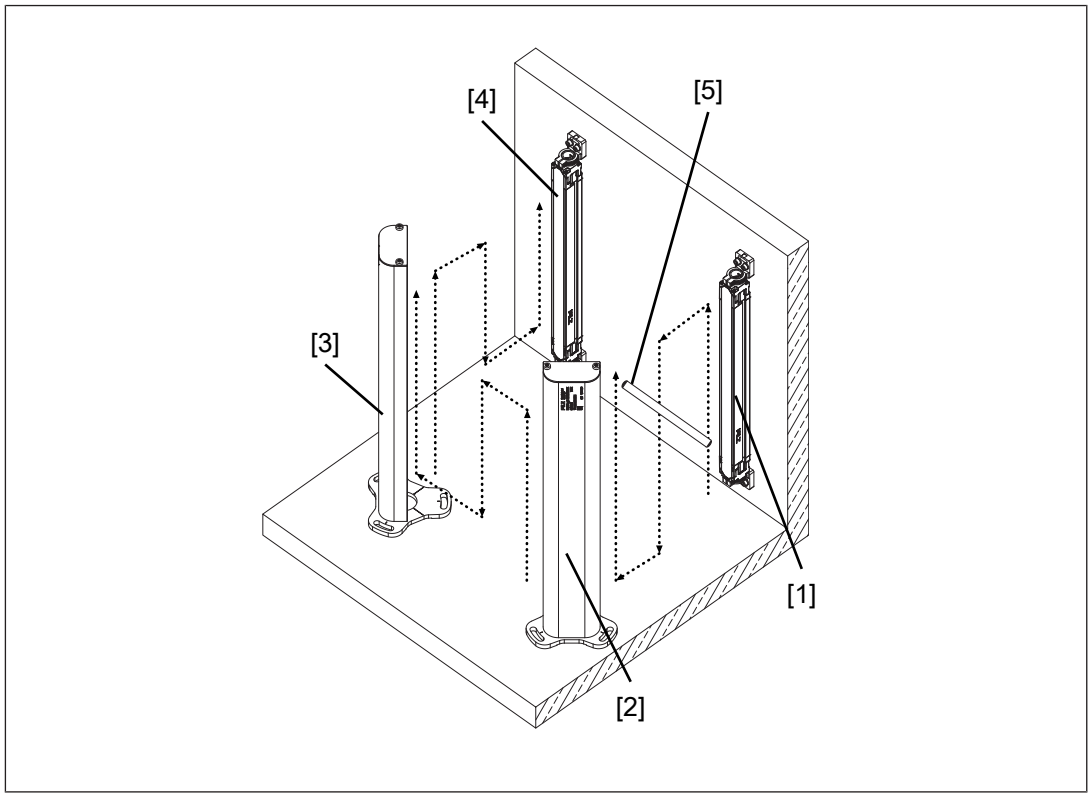

Legend

[1] Transmitter
[2] First deviating mirror
[3] Second deviating mirror
[4] Receiver
[5] Test rod

- Check the glass mirror on the PSEN opII mirror column.
  - Glass mirror scratched: Exchange the PSEN opII mirror column.
  - Glass mirror dirty: Clean the front panel [18].

    In a particularly dirty environment, the glass mirror should be checked more frequently for dirt.
- Check the alignment between the PSEN opII mirror column and the safety light curtain's transmitter/receiver; where there are multiple PSEN opII mirror column units, check the alignment to each other.
  - The full light beam from the safety light curtain's transmitter must strike the deviating mirror and the full light beam reflected by the deviating mirror must strike the safety light curtain's receiver.

Cleaning

Other than cleaning the glass mirror, the PSEN opII mirror column requires no other form of maintenance.

WARNING!

Loss of the safety function of the PSEN opII mirror column due to the use of improper cleaning agents

Improper cleaning agents can damage the safety light curtain and lead to malfunctions.

– Use only the cleaning agents specified.

When cleaning, use a lint-free cotton cloth moistened with water or a 50% isopropyl solution.

Avoid using

- Other alcohols,
- Solvents,
- Cloths made of wool,
- Cloths made of synthetic material.

Clean the glass mirror during the regular inspection [17].

Dimensions

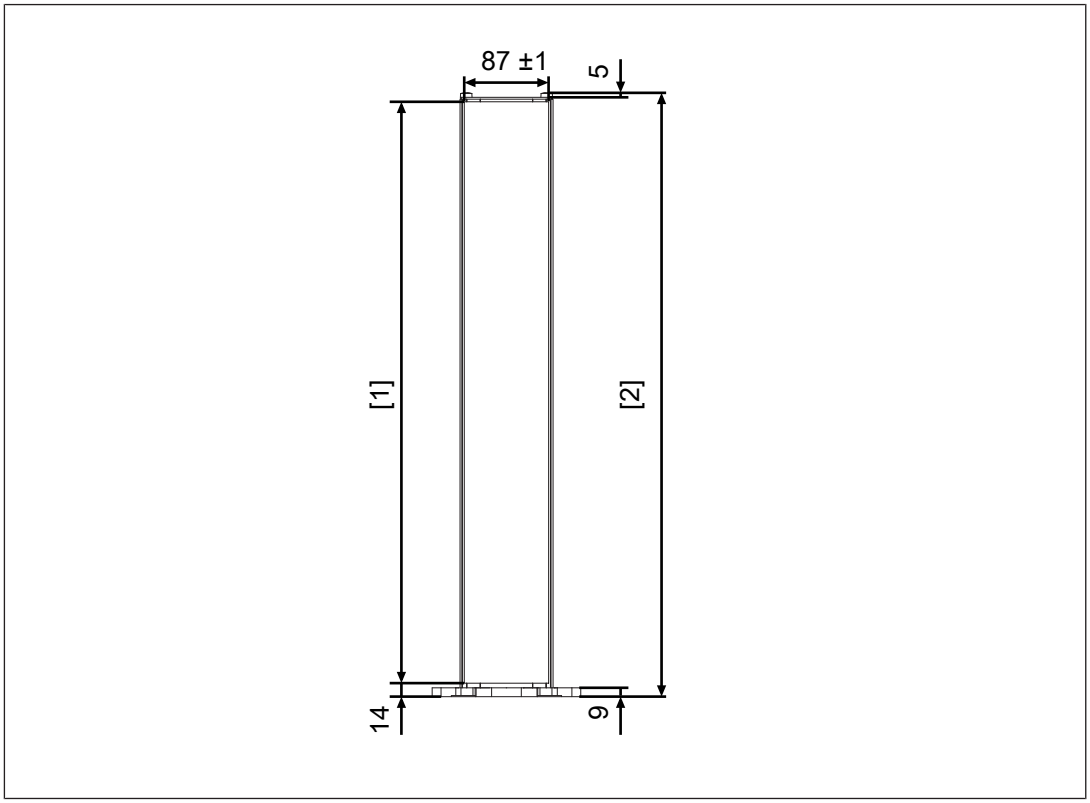

Legend

[1] Height of the deviating mirror (see Technical details [21])

[2] Overall height of the mirror column, incl. base plate

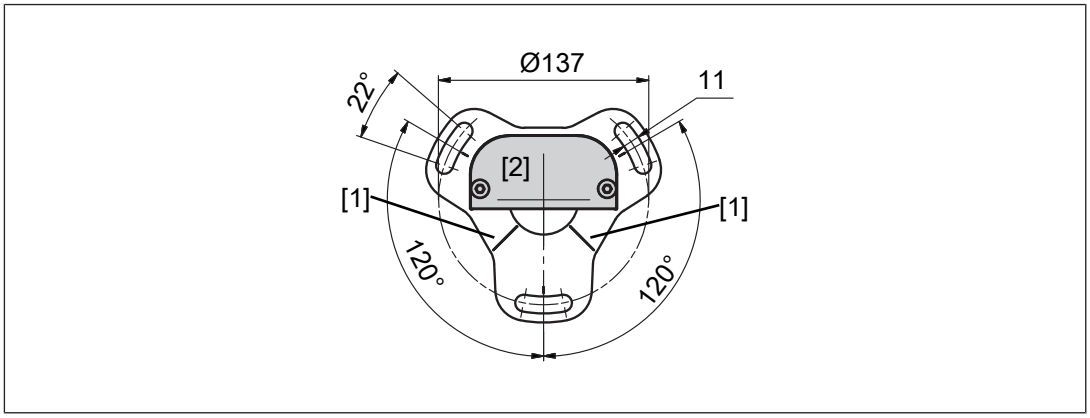

Fig.: Mirror column without adjustable base unit - plan view

Legend

[1] Marking to align the mirror in the protected field

[2] Mirror column

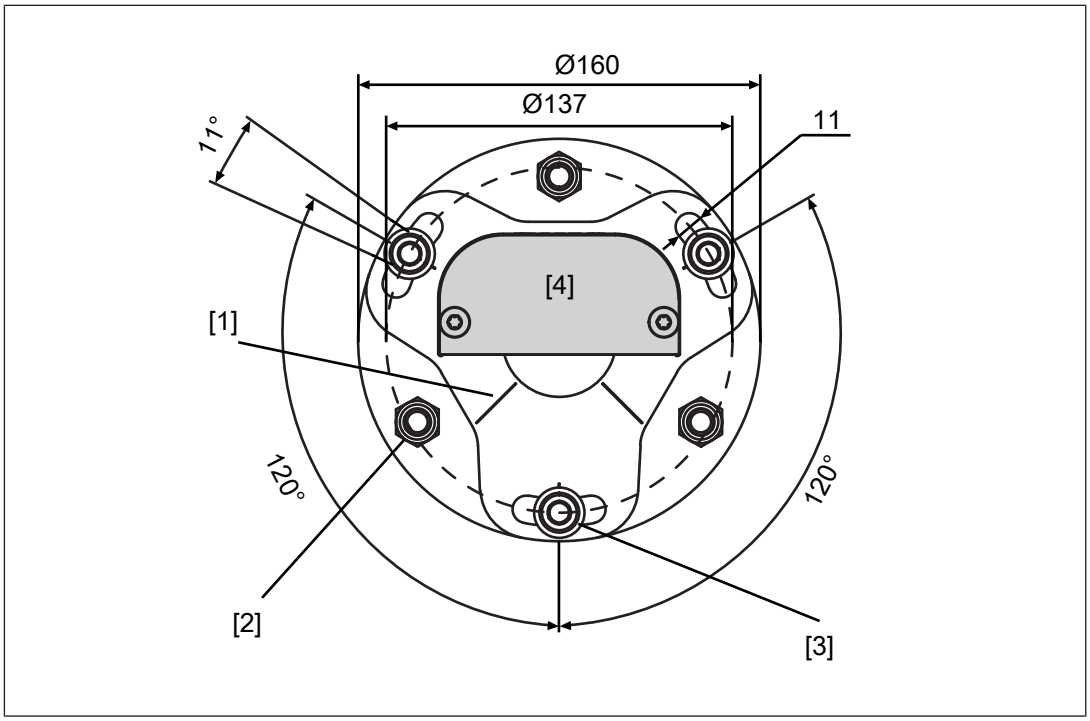

Fig.: Adjustable base unit with mirror column attached and fixed - plan view

Legend

[1] Marking to align the mirror in the protected field

[2] Adjusting nuts for vertical alignment of the mirror column

[3] Locking screws for attaching the mirror column to the adjustable base unit and for rotational alignment

[4] Mirror column, attached and fixed

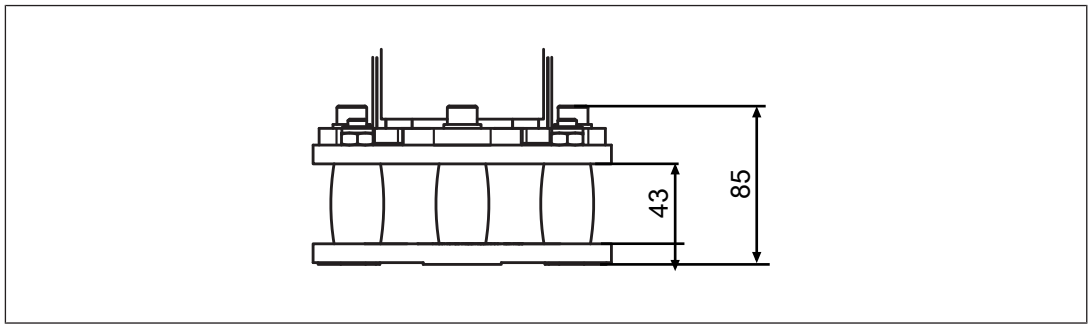

Fig.: Adjustable base unit with installed mirror column - side view (dimensions as delivered)

Technical details Order no. 632032-632034

General	632032	632033	632034
Approvals	-	-	-
Optical data	**632032**	**632033**	**632034**
Max. decrease in operating range with PSEN opII	**10 %**	**10 %**	**10 %**
Environmental data	**632032**	**632033**	**632034**
Ambient temperature			
Temperature range	**-10 - 60 °C**	**-10 - 60 °C**	**-10 - 60 °C**
Storage temperature			
Temperature range	**-25 - 70 °C**	**-25 - 70 °C**	**-25 - 70 °C**
Condensation during operation	**Not permitted**	**Not permitted**	**Not permitted**
Mechanical data	**632032**	**632033**	**632034**
Min. distance of two mirrors with Type 2 light curtain	**0,0 m**	**0,0 m**	**0,0 m**
Min. distance of two mirrors with Type 3 light curtain	**1,2 m**	**1,2 m**	**1,2 m**
Min. distance of two mirrors with Type 4 light curtain	**1,2 m**	**1,2 m**	**1,2 m**
Max. angle between transmitter/receiver and deviating mirror	**35° - 55°**	**35° - 55°**	**35° - 55°**
Min. distance transmitter to mirror with Type 2 light curtain	**0,0 m**	**0,0 m**	**0,0 m**
Min. distance transmitter to mirror with Type 3 light curtain	**1,2 m**	**1,2 m**	**1,2 m**
Min. distance transmitter to mirror with Type 4 light curtain	**1,2 m**	**1,2 m**	**1,2 m**

Mechanical data	632032	632033	632034
Min. distance receiver to mirror with Type 2 light guard	**0,0 m**	**0,0 m**	**0,0 m**
Min. distance receiver to mirror with Type 3 light guard	**0,0 m**	**0,0 m**	**0,0 m**
Min. distance receiver to mirror with Type 4 light guard	**0,0 m**	**0,0 m**	**0,0 m**
Material			
Housing	**Aluminium**	**Aluminium**	**Aluminium**
Mirror	**Glas**	**Glas**	**Glas**
Max. torque setting levelling foot	**18 Nm**	**18 Nm**	**18 Nm**
Dimensions			
Height	**600 mm**	**900 mm**	**1.200 mm**
Width	**96 mm**	**96 mm**	**96 mm**
Depth	**49 mm**	**49 mm**	**49 mm**
Width mirror with levelling foot	**160 mm**	**160 mm**	**160 mm**
Height mirror including base plate	**624 mm**	**924 mm**	**1.224 mm**
Weight	**2.040 g**	**2.900 g**	**3.770 g**

Technical details Order no. 632035-632036

General	632035	632036
Approvals	**-**	**-**
Optical data	**632035**	**632036**
Max. decrease in operating range with PSEN opII	**10 %**	**10 %**
Environmental data	**632035**	**632036**
Ambient temperature		
Temperature range	**-10 - 60 °C**	**-10 - 60 °C**
Storage temperature		
Temperature range	**-25 - 70 °C**	**-25 - 70 °C**
Condensation during operation	**Not permitted**	**Not permitted**
Mechanical data	**632035**	**632036**
Min. distance of two mirrors with Type 2 light curtain	**0,0 m**	**0,0 m**
Min. distance of two mirrors with Type 3 light curtain	**1,2 m**	**1,2 m**
Min. distance of two mirrors with Type 4 light curtain	**1,2 m**	**1,2 m**
Max. angle between transmitter/receiver and deviating mirror	**35° - 55°**	**35° - 55°**

Mechanical data	632035	632036
Min. distance transmitter to mirror with Type 2 light curtain	**0,0 m**	**0,0 m**
Min. distance transmitter to mirror with Type 3 light curtain	**1,2 m**	**1,2 m**
Min. distance transmitter to mirror with Type 4 light curtain	**1,2 m**	**1,2 m**
Min. distance receiver to mirror with Type 2 light guard	**0,0 m**	**0,0 m**
Min. distance receiver to mirror with Type 3 light guard	**0,0 m**	**0,0 m**
Min. distance receiver to mirror with Type 4 light guard	**0,0 m**	**0,0 m**
Material		
Housing	**Aluminium**	**Aluminium**
Mirror	**Glas**	**Glas**
Max. torque setting levelling foot	**18 Nm**	**18 Nm**
Dimensions		
Height	**1.650 mm**	**1.950 mm**
Width	**96 mm**	**96 mm**
Depth	**49 mm**	**49 mm**
Width mirror with levelling foot	**160 mm**	**160 mm**
Height mirror including base plate	**1.674 mm**	**1.974 mm**
Weight	**5.070 g**	**5.940 g**

Technical details for adjustable base unit Order no. 632037

General	
Approvals	**-**
Environmental data	
Ambient temperature	
Temperature range	**-10 - 60 °C**
Storage temperature	
Temperature range	**-25 - 70 °C**
Mechanical data	
Material	
Levelling foot	**Aluminium**
Max. torque setting levelling foot	**18 Nm**
Dimensions	
Height levelling foot	**78 mm**
Diameter levelling foot	**160 mm**
Weight	**1.050 g**

Technical details for floor anchor Order no. 632012

General	
Approvals	**-**
Environmental data	
Ambient temperature	
Temperature range	**-10 - 60 °C**
Storage temperature	
Temperature range	**-25 - 70 °C**
Mechanical data	
Material	**Galvanised steel**
Weight	**150 g**

Order reference

Mirror column set

consisting of

- PSEN opII mirror column-xxx,
- PSEN opII adjustable base unit and
- Floor anchor PSEN screw set mirror column

Product type	Features	Height	Order no.
PSEN opII mirror column-060 Set	with PSEN opII mirror column-060	60 cm	632 007
PSEN opII mirror column-090 Set	with PSEN opII mirror column-090	90 cm	632 008
PSEN opII mirror column-120 Set	with PSEN opII mirror column-120	120 cm	632 009
PSEN opII mirror column-165 Set	with PSEN opII mirror column-165	165 cm	632 010
PSEN opII mirror column-195 Set	with PSEN opII mirror column-195	195 cm	632 011

Mirror columns

Individual mirror column (without PSEN opII adjustable base unit)

Product type	Features	Height	Order no.
PSEN opII mirror column-060	Mirror column (deviating mirror in protective column)	60 cm	632 032
PSEN opII mirror column-090	Mirror column (deviating mirror in protective column)	90 cm	632 033
PSEN opII mirror column-120	Mirror column (deviating mirror in protective column)	120 cm	632 034
PSEN opII mirror column-165	Mirror column (deviating mirror in protective column)	165 cm	632 035

Product type	Features	Height	Order no.
PSEN opII mirror column-195	Mirror column (deviating mirror in protective column)	195 cm	632 036

Accessories

Product type	Features	Order no.
PSEN opII adjustable base unit	Adjustable base unit, suitable for all deviating mirrors	632 037
PSEN opII Laser-pointer	Laser alignment aid for the safety light grid series PSEN opII	632 014
PSEN screw set mirror column	Screw set for attaching a PSEN opII mirror column or a PSEN opII adjustable base unit to the floor 3 x M10	632 012

Support

Technical support is available from Pilz round the clock.

Americas
Brazil
+55 11 97569-2804
Canada
+1 888-315-PILZ (315-7459)
Mexico
+52 55 5572 1300
USA (toll-free)
+1 877-PILZUSA (745-9872)

Asia
China
+86 21 60880878-216
Japan
+81 45 471-2281
South Korea
+82 31 450 0680

Australia
+61 3 95600621

Europe
Austria
+43 1 7986263-0
Belgium, Luxembourg
+32 9 3217575
France
+33 3 88104000
Germany
+49 711 3409-444
Ireland
+353 21 4804983
Italy, Malta
+39 0362 1826711
Scandinavia
+45 74436332
Spain
+34 938497433
Switzerland
+41 62 88979-30
The Netherlands
+31 347 320477
Turkey
+90 216 5775552
United Kingdom
+44 1536 462203

You can reach our international hotline on:
+49 711 3409-444
support@pilz.com

Pilz develops environmentally-friendly products using ecological materials and energy-saving technologies. Offices and production facilities are ecologically designed, environmentally-aware and energy-saving. So Pilz offers sustainability, plus the security of using energy-efficient products and environmentally-friendly solutions.

Energy saving by Pilz

BLUECOMPETENCE Alliance Member
Partner of the Engineering Industry Sustainability Initiative

pilz
Partner of:
The Best of German Engineering

Pilz GmbH & Co. KG
Felix-Wankel-Straße 2
73760 Ostfildern, Germany
Tel.: +49 711 3409-0
Fax: +49 711 3409-133
info@pilz.com
www.pilz.com

PILZ
THE SPIRIT OF SAFETY

1004629-EN-02, 2018-06 Printed in Germany
© Pilz GmbH & Co. KG, 2015

CMSE®, InduraNET p®, PAS4000®, PAScal®, PASconfig®, Pilz®, PIT®, PLID®, PMCprimo®, PMCprotego®, PMCtendo®, PMD®, PMI®, PNOZ®, Primo®, PSEN®, PSS®, PVIS®, SafetyBUS SafetyEYE®, SafetyNET p®, THE SPIRIT OF SAFETY® are registered and protected trademarks of Pilz GmbH & Co. KG in some countries. We would point out that product features m from the details stated in this document, depending on the status at the time of publication and the scope of the equipment. We accept no responsibility for the validity, accuracy and entirety of the text and graphics presented in this information. Please contact our Technical Support if you have any questions.