E30482

Screw-in adapter for process sensors

ADAPT G1/2-G3/4 KONUS/O-RG

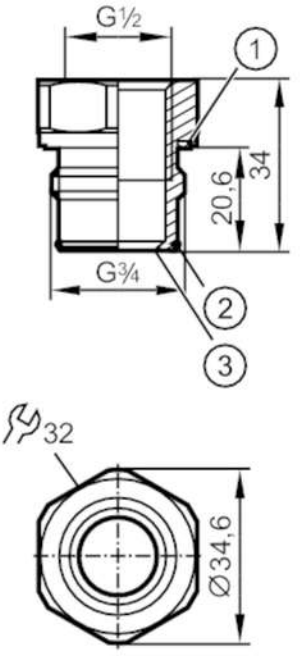

1 groove with sealing ring DIN 3869-27 (FKM)
2 O-ring 18.5 x 1 (FKM)
3 sealing area

EC 1935/2004 FDA

Tests / approvals		
Pressure Equipment Directive		A possible classification to PED depends on the application and has to be carried out by the user / operator.
Pressure Equipment Directive EAC		The adapter is intended for use in devices, machines and installations that do not fall under the categories of the technical rule TR CU 032/2013.
Safety instructions		The compatibility between medium and product material has to be checked in all applications.
Mechanical data		
Weight	[g]	126
Materials		stainless steel (1.4404 / 316L)
Sensor connection		G 1/2 sealing cone
Process connection		threaded connection G 3/4
Surface characteristics Ra/Rz of the wetted parts		0.4 / 4
Remarks		
Pack quantity		1 pcs.