TIMKEN

The Timken Company
4500 Mt Pleasant St. NW
N. Canton, OH 44720
Phone: (234) 262-3000
E-Mail: CustomerCAD@timken.com • **Web site:** www.timken.com

Timken Part Number 07087X - 07210X, Tapered Roller Bearings - TS (Tapered Single) Imperial

This is the most basic and most widely used type of tapered roller bearing. It consists of two main separable parts: the cone (inner ring) assembly and the cup (outer ring). It is typically mounted in opposing pairs on a shaft.



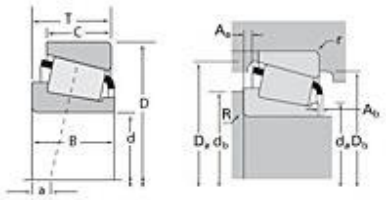

Specifications | Dimensions | Abutment and Fillet Dimensions | Basic Load Ratings | Factors

Specifications

Series	07000
Cone Part Number	07087X
Cup Part Number	07210X
Design Units	Imperial
Bearing Weight	0.30 lb 0.100 Kg
Cage Type	Stamped Steel

Dimensions

d - Bore	0.8750 in 22.225 mm
D - Cup Outer Diameter	2 in 50.8 mm

B - Cone Width	0.5614 in 14.260 mm
C - Cup Width	0.5000 in 12.700 mm
T - Bearing Width	0.5910 in 15.011 mm

Abutment and Fillet Dimensions

R - Cone Backface "To Clear" Radius[1]	0.060 in 1.520 mm
r - Cup Backface "To Clear" Radius[2]	0.060 in 1.52 mm
da - Cone Frontface Backing Diameter	1.06 in 26.92 mm
db - Cone Backface Backing Diameter	1.14 in 28.96 mm
Da - Cup Frontface Backing Diameter	1.89 in 48.01 mm
Db - Cup Backface Backing Diameter	1.75 in 44.45 mm
Ab - Cage-Cone Frontface Clearance	0.08 in 2 mm
Aa - Cage-Cone Backface Clearance	0 in 0 mm
a - Effective Center Location[3]	-0.11 in -2.80 mm

Basic Load Ratings

C90 - Dynamic Radial Rating (90 million revolutions)[4]	1700 lbf 7550 N
C1 - Dynamic Radial Rating (1 million revolutions)[5]	6540 lbf 29100 N
C0 - Static Radial Rating	6650 lbf 29600 N
C_{a90} - Dynamic Thrust Rating (90 million revolutions)[6]	1170 lbf 5190 N

Factors

K - Factor[7]	1.45
e - ISO Factor[8]	0.4
Y - ISO Factor[9]	1.49
G1 - Heat Generation Factor (Roller-Raceway)	7.6
G2 - Heat Generation Factor (Rib-Roller End)	7.1
Cg - Geometry Factor	0.0509

[1] These maximum fillet radii will be cleared by the bearing corners.
[2] These maximum fillet radii will be cleared by the bearing corners.
[3] Negative value indicates effective center inside cone backface.
[4] Based on 90 x 10^6 revolutions L_{10} life, for The Timken Company life calculation method. C_{90} and C_{a90} are radial and thrust values.
[5] Based on 1 x 10^6 revolutions L_{10} life, for the ISO life calculation method.
[6] Based on 90 x 10^6 revolutions L_{10} life, for The Timken Company life calculation method. C_{90} and C_{a90} are radial and thrust values for a single-row, $C_{90(2)}$ is the two-row radial value.
[7] These factors apply for both inch and metric calculations. Consult your Timken representative for instruction on use.
[8] These factors apply for both inch and metric calculations. Consult your Timken representative for instruction on use.
[9] These factors apply for both inch and metric calculations. Consult your Timken representative for instruction on use.

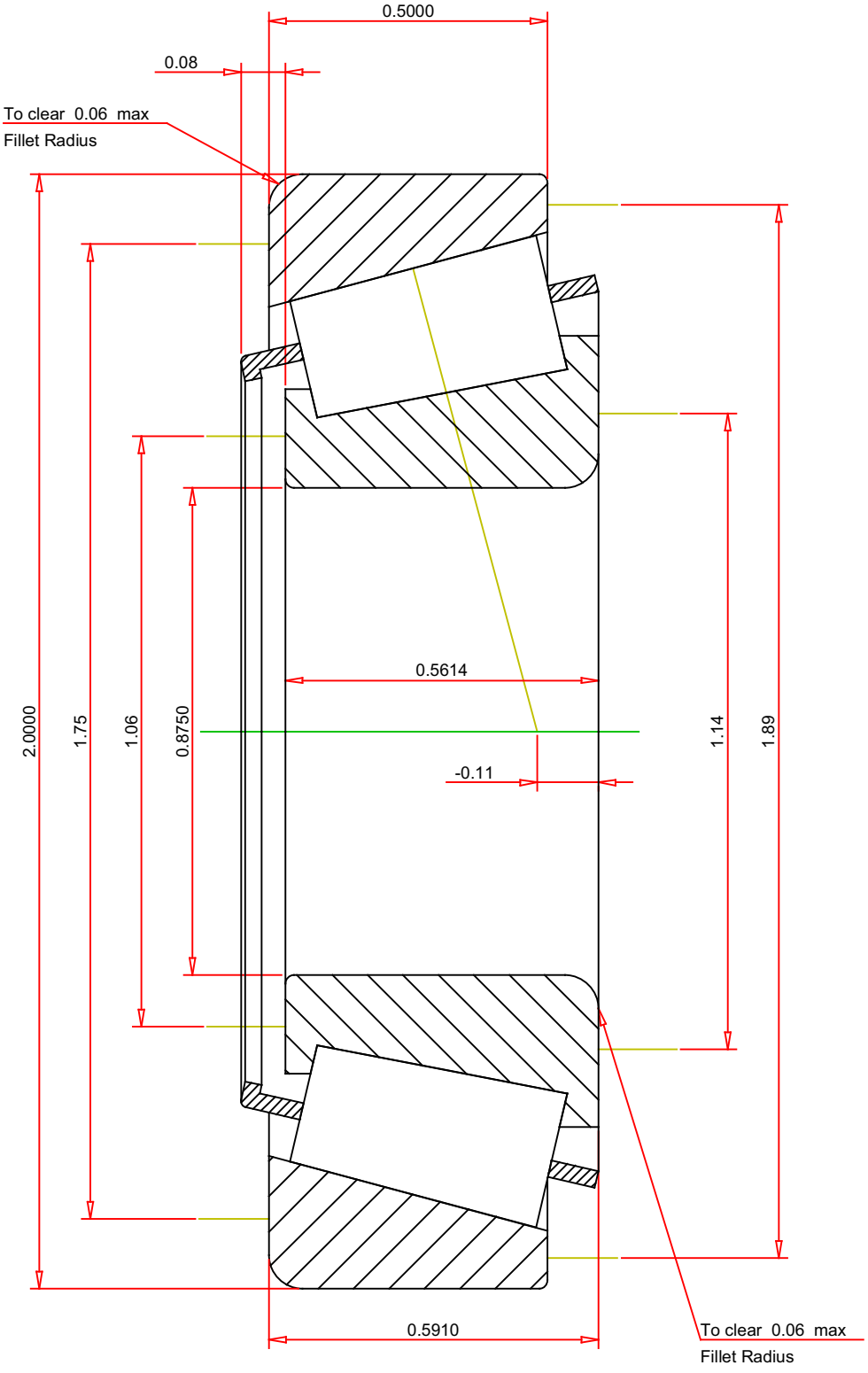

IMPERIAL UNITS

ISO Factor - e	0.4	
ISO Factor - Y	1.49	
Bearing Weight	0.3	lb
Number of Rollers Per Row	16	
Effective Center Location	-0.11	inch

TIMKEN®

THE TIMKEN COMPANY
NORTH CANTON, OHIO USA

07087X - 07210X
TS BEARING ASSEMBLY

K Factor	1.45	
Dynamic Radial Rating - C90	1700	lbf
Dynamic Thrust Rating - Ca90	1170	lbf
Static Radial Rating - C0	6650	lbf
Dynamic Radial Rating - C1	6540	lbf

Every reasonable effort has been made to ensure the accuracy of the information contained in this writing, but no liability is accepted for errors, omissions or for any other reason.

FOR DISCUSSION ONLY