EVM062

Y connection cable

YDOGHXX0VAS00,2HXXSTGH050VAS

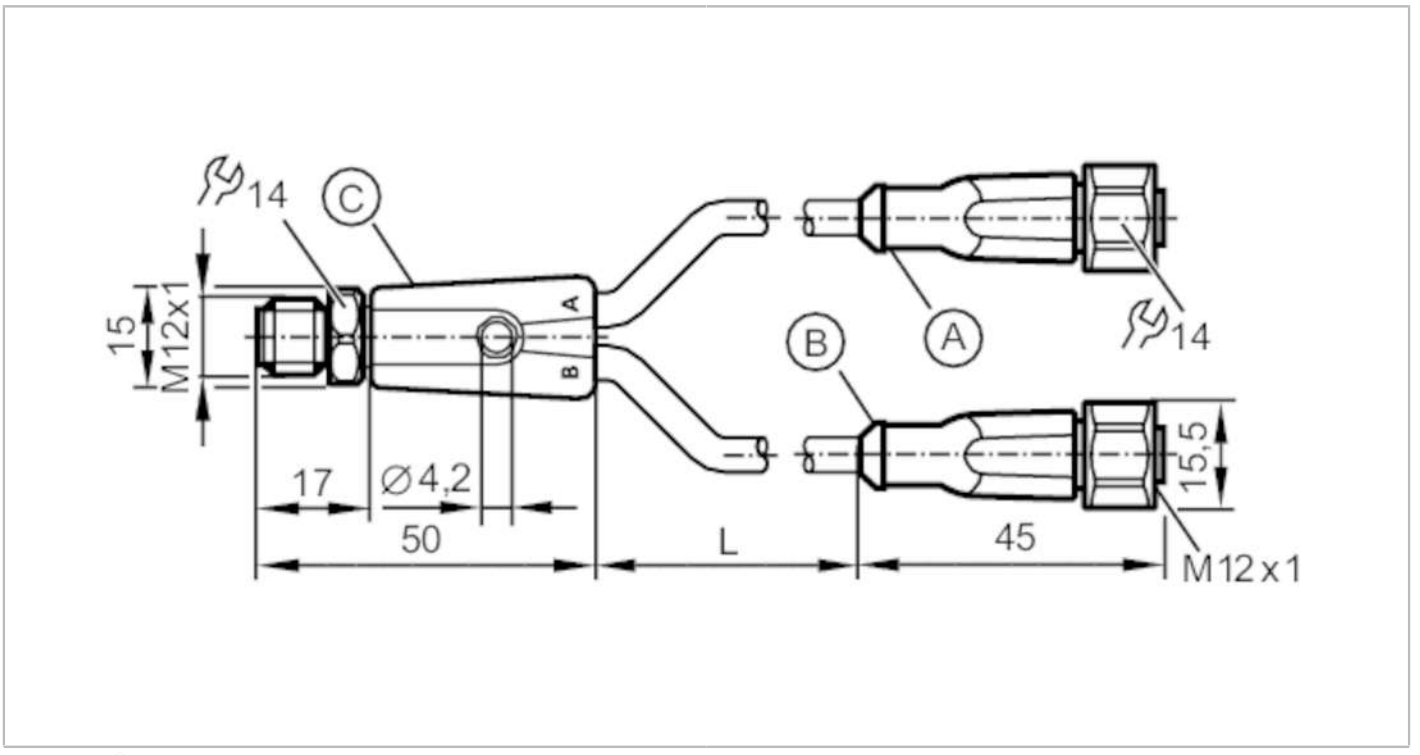

Application			
Special feature		Free from silicone; Halogen-free; Gold-plated contacts; Drag chain suitability	
Free from silicone		yes	
Electrical data			
Operating voltage	[V]	< 60 AC/DC	
Protection class		II	
Max. current load total	[A]	4	
Operating conditions			
Ambient temperature	[°C]	-25...90	
Note on ambient temperature		cULus: ...75 °C	
Ambient temperature (moving)	[°C]	-25...90	
Note on ambient temperature (moving)		cULus: ...75 °C	
Storage temperature	[°C]	-25...55	
Storage humidity	[%]	10...100	
Other climatic conditions for storage according to stated class		1K22/ DIN 60721-3-1	
Protection		IP 65; IP 67; IP 68; IP 69K	
Tests / approvals			
Vibration resistance		EN 60068-2-6 Fc	20 g (10...3000 Hz) / -20 °C / 50 °C
			50 sweep cycles, 1 octave per minute, in 3 axes

EVM062

Y connection cable

YDOGHXX0VAS00,2HXXSTGH050VAS

Shock resistance	EN 60068-2-27 Ea	100 g 11 ms half sine; 6 shocks each in every direction along the three coordinate axes / -40 °C / 85 °C
Continuous shock resistance	EN 60068-2-29 Eb	40 g 6 ms; 4000 shocks each in every direction of the 3 coordinate axes / -20 °C / 50 °C
Fast temperature change	EN 60068-2-14 Na	TA = -40°C; TB = 85°C; t1 = 30 min; t2 = < 10 s 50 cycles
Salt spray test	EN 60068-2-52 Kb	severity level 5 (4 test cycles)

Mechanical data

Weight [g]	56.9	
Moulded-body material	TPU	
Material nut	stainless steel (1.4404 / 316L)	
Sealing material	FKM	
Number of ports splitter box	2	
Drag chain suitability	yes	
Drag chain suitability	bending radius for flexible use	min. 10 x cable diameter
	travel speed	max. 3.3 m/s for a horizontal travel length of 5 m and max. acceleration of 5 m/s²
	bending cycles	> 5 Mio.
	torsional strain	± 180 °/m

Remarks

Remarks	without label holders
Pack quantity	1 pcs.

Electrical connection

Cable: 0.2 m, PUR, Halogen-free, black, Ø 4.9 mm; 3 x 0.34 mm² (42 x Ø 0.1 mm) + 4 x 0.34 mm² (42 x Ø 0.1 mm)

Electrical connection - plug

Connector: 1 x M12, straight; coding: A; Moulded body: TPU, orange; Locking: stainless steel (1.4404 / 316L); Contacts: gold-plated; Tightening torque: 0.6...1.5 Nm

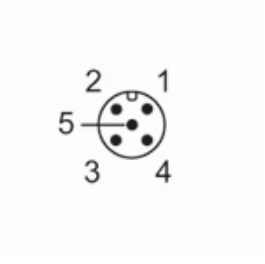

EVM062

Y connection cable

YDOGHXX0VAS00,2HXXSTGH050VAS

Connection

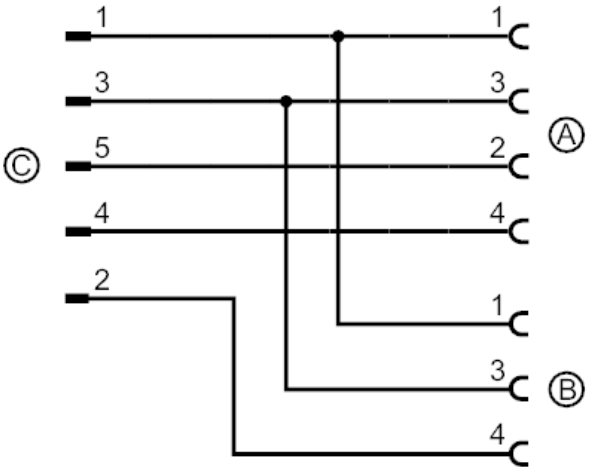

Electrical connection - socket

Connector: 2 x M12, straight; coding: A; Moulded body: TPU, orange; Locking: stainless steel (1.4404 / 316L); Sealing: FKM; Contacts: gold-plated; Tightening torque: 0.6...1.5 Nm

