DPM 3AS-BL

3½ Digit Backlit LCD Voltmeter Module

PRODUCT DESCRIPTION

The DPM 3AS-BL features a 200mV d.c. measurement range with auto-zero and auto-polarity. Decimal points are user selectable. The DPM 3AS-BL features a negative rail generator which enables the meter to measure a signal referenced to its own power supply GND. LED backlighting ensures excellent readability under low light conditions. The design of the panel meter's housing allows the module to be easily snapped into a panel. The module's low cost means it will suit high and low volume applications. The DPM 3AS-BL is intended to replace the DPM 3, DPM 3S, DPM 3-BL and DPM 3S-BL in many applications, usually requiring only minor circuit modifications.



FEATURES

- 11mm (0.43") Digit Height
- 200mV d.c. Full Scale Reading
- 3.0 to 7.5V or 6.0 to 15.0V Operation
- Auto-zero and Auto-polarity
- Programmable Decimal Points
- LED Backlighting

TYPICAL APPLICATIONS

- Precision Instrumentation Systems
- Power Supply Monitoring
- Hand held instruments
- Panel-Mount Indication
- Low Power Voltage Measurement

ORDERING INFORMATION

	Stock Number
Standard Meter	**DPM 3AS-BL**

ELECTRICAL SPECIFICATIONS

Specification		Min.	Typ.	Max.	Unit
Accuracy (overall error) *			0.1		% (±1 count)
Linearity				±1	count
Sample rate			2.5		samples/sec
Operating temperature range		0		50	°C
Temperature stability			250		ppm/°C
Meter supply voltage	V+ to GND configuration	3.0	5.0	7.5	V d.c.
	V+ to V- configuration	6.0	9.0	15.0**	V d.c.
Meter supply current	V+ to GND configuration		350		µA
	V+ to V- configuration		175		µA
Backlight supply voltage		4.75	5.0	***	V d.c.
Backlight supply current @ 5V d.c.			40	60	mA
Input leakage current (Vin = 0V)			1	10	pA

* To ensure maximum accuracy, re-calibrate periodically.

** Operation of the meter beyond the maximum supply voltage rating may cause permanent damage to the meter.

*** An external series resistor is required above 5V, see Applications.

Unless otherwise noted, specifications apply at T_A=25°C, V_{supply}=5Vd.c. (f_{clock}=48kHz) and are tested with the module configured for fully floating input mode.

SAFETY

To comply with the Low Voltage Directive (LVD 93/68/EEC), input voltages to the module's pins must not exceed 60Vdc. The user must ensure that the incorporation of the panel meter into the user's equipment conforms to the relevant sections of BS EN 61010 (Safety Requirements for Electrical Equipment for Measuring, Control and Laboratory Use).

LASCAR ELECTRONICS LTD.
MODULE HOUSE
WHITEPARISH
WILTSHIRE SP5 2SJ
UK
TEL: +44 (1794) 884567
FAX: +44 (1794) 884616
E-MAIL: sales@lascar.co.uk

LASCAR ELECTRONICS INC.
4258 WEST 12th STREET
ERIE
PA 16505
USA
TEL: +1 (814) 835 0621
FAX: +1 (814) 838 8141
E-MAIL: us-sales@lascarelectronics.com

LASCAR ELECTRONICS (HK) LTD.
8th FLOOR, CHINA AEROSPACE CENTRE,
143 HOI BUN ROAD,
KWUN TONG, KOWLOON,
HONG KONG
TEL: +852 2389 6502
FAX: +852 2389 6535
E- mail: saleshk@lascar.com.hk

DIMENSIONS

All dimensions in mm (inches)

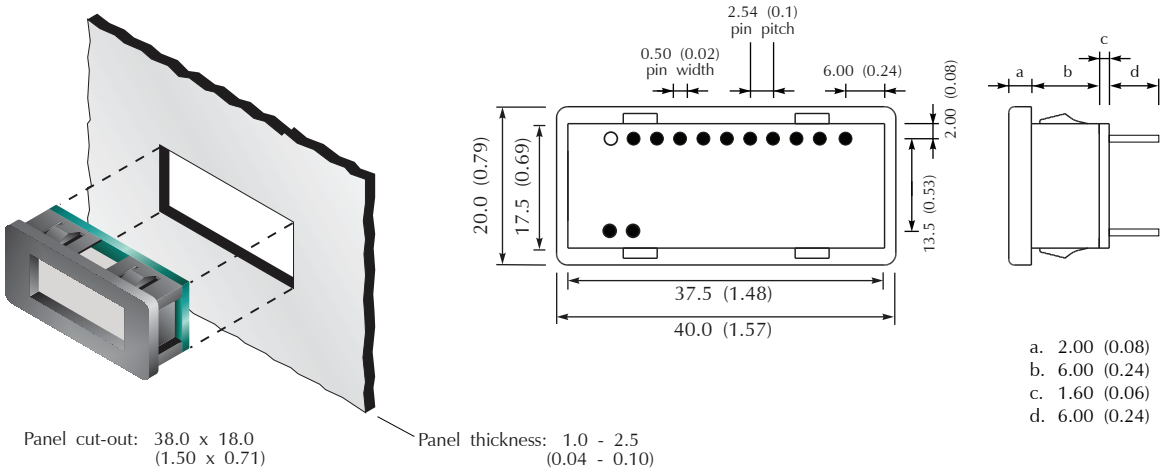

a. 2.00 (0.08)
b. 6.00 (0.24)
c. 1.60 (0.06)
d. 6.00 (0.24)

PANEL FITTING

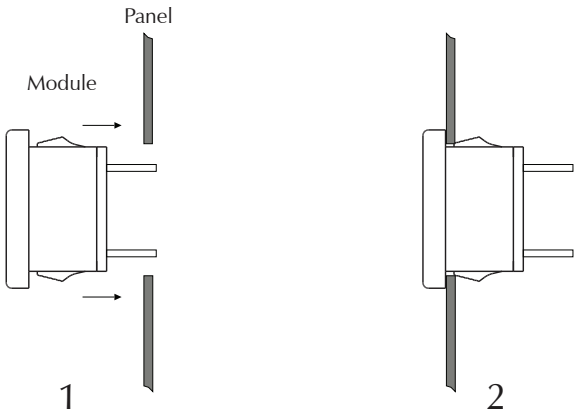

FUNCTIONAL BLOCK DIAGRAM

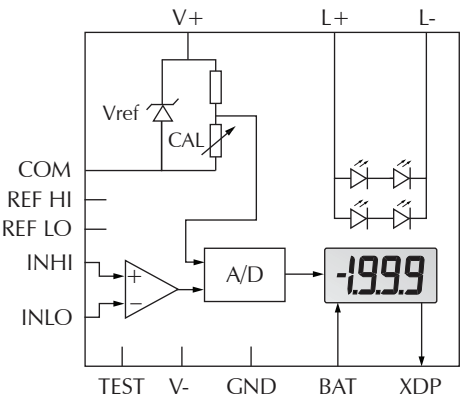

PIN CONFIGURATION (rear view)

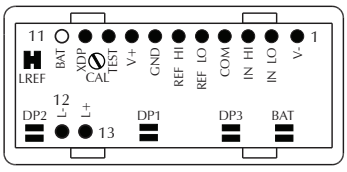

CIRCUIT DIAGRAM

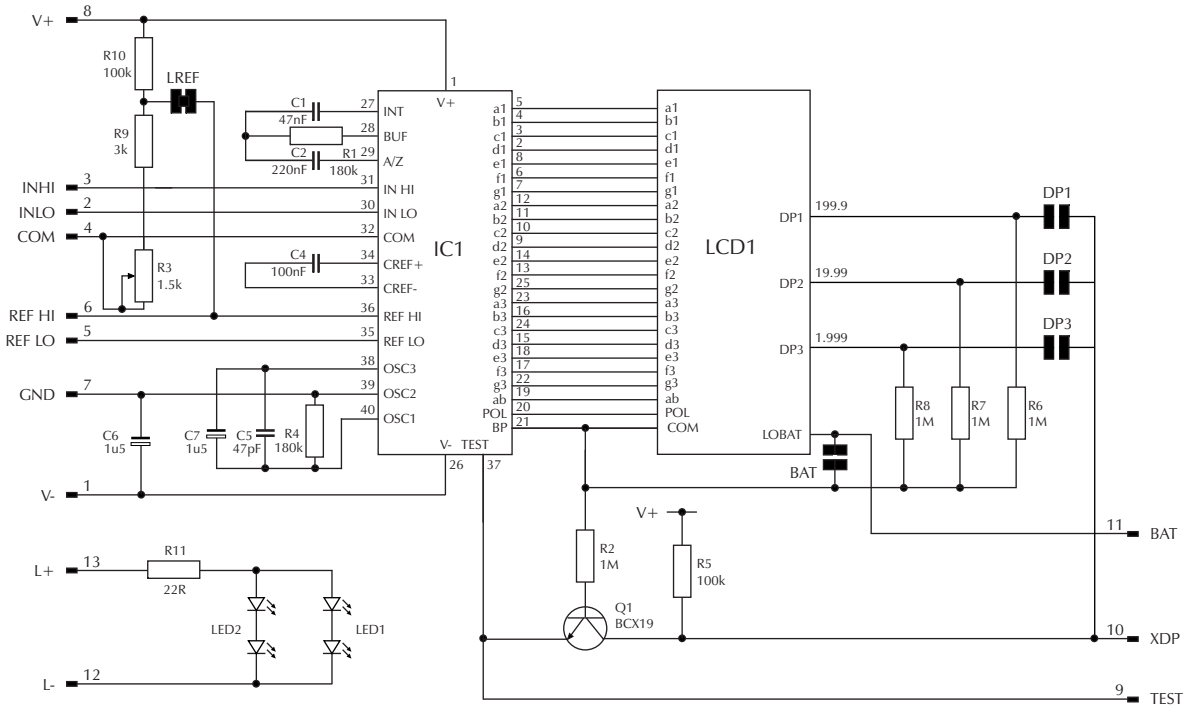

PIN FUNCTIONS

1. V- Negative power supply to the meter (6.0 to 15.0V meter power supply applications only).
2. INLO Negative measuring input.
3. INHI Positive measuring input.
4. COM Ground for the analogue section of the A/D converter. It is actively held at 3.05V (nom.) below V+ and must not be allowed to sink excessive current (>100µA) by, for instance, connecting to a higher voltage.
5. REF LO Negative input for reference voltage.
6. REF HI Positive input for reference voltage.
7. GND 0V power supply to the meter (3.0 to 7.5V meter power supply applications only).
8. V+ Positive power supply to the meter.
9. TEST Connect to V+ to test the LCD. Do not connect to V+ for more than a few seconds as this may damage the LCD. TEST is held actively at 5V (nom.) below V+ and is the ground for the digital section of the meter. It can be used to power external logic up to a maximum of 1mA.
10. XDP Inversion of LCD drive voltage.
11. BAT Low Battery annunciator drive pin. See application on the right. This pin is not fitted as standard.
12. L- Negative power supply to LED backlighting.
13. L+ Positive power supply to LED backlighting. The backlighting is internally configured for 5V operation. If a higher voltage is used, then add a series current limiting resistor Rs. See Applications for calculations of Rs.

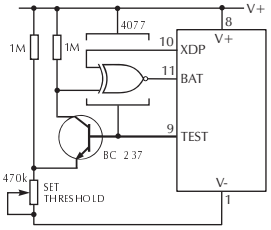

Check Link BAT is OPEN.

Note:

A negative supply is generated internally and mirrors the positive supply. For example: if V+ is +5V, then the internally generated V- is -5V. When measuring with the input referenced to the same supply rail as that of the panel meter, then the limitations on the input range are (V- + 1.5V) to (V+ - 1.5V).

Solder Links:

LREF	Normally Closed. Enables the internal voltage reference circuit. Cut this link when using an external voltage reference.
BAT	Normally Open. Disables the Low Battery warning annunciator. Cut this link and add a low battery detection circuit to enable the Low Battery warning annunciator via Pin 11 (BAT).
DP1	Normally Open. Close this solder link to enable decimal point DP1.
DP2	Normally Open. Close this solder link to enable decimal point DP2.
DP3	Normally Open. Close this solder link to enable decimal point DP3.

SCALING

Two external resistors Ra and Rb may be used to alter the full scale reading (FSR) of the meter - see table. The meter will have to be re-calibrated by adjusting the calibration potentiometer on the rear of the module.

	FSR	Ra	Rb
Voltage (Vin)	2V	910k	100k
	20V	1M	10k
	200V	1M	1k
	2000V*	1M	100R
Current (Iin)	200µA	0R	1k
	2mA	0R	100R
	20mA	0R	10R
	200mA	0R	1R

*Ensure that Ra is rated for high voltage use.

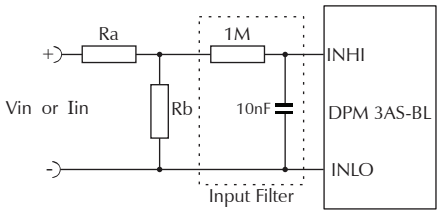

APPLICATIONS

Do not connect more than one meter to the same power supply if the meters cannot use the same signal ground. Taking any input beyond the power supply rails will damage the meter.

5V supply operation (3.0 to 7.5V Meter Power Supply)

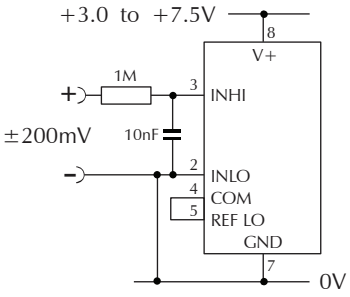

Measuring a single ended input voltage referenced to supply, i.e. the input voltage and the meter's power supply share the same 0V rail.
Ensure solder link LREF is closed.

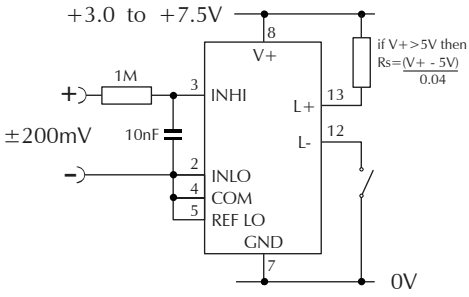

Measuring an input voltage referenced to a floating supply, i.e. the input voltage and the meter's power supply are isolated from each other.
Ensure solder link LREF is closed.

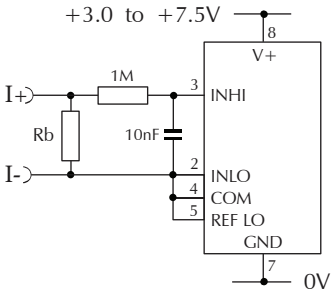

Measuring a current from a circuit which is floating with respect to the DPM's supply, i.e. the current and the meter's power supply are isolated from each other.
Ensure solder link LREF is closed.

9V supply operation (6.0 to 15.0V Meter Power Supply)

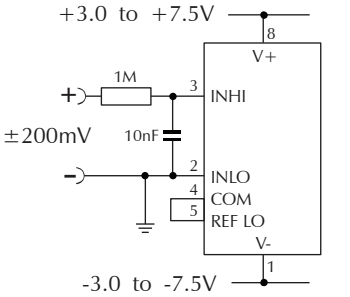

Measuring a single ended input voltage referenced to supply, i.e. the input voltage and the meter's power supply share the same 0V rail.
Ensure solder link LREF is closed.

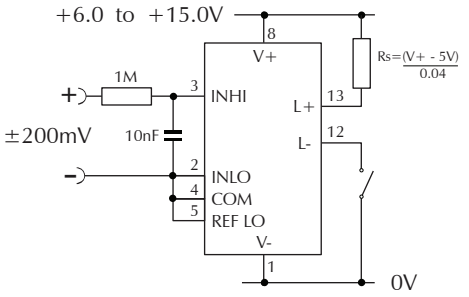

Measuring an input voltage referenced to a floating supply, i.e. the input voltage and the meter's power supply are isolated from each other.
Ensure solder link LREF is closed.

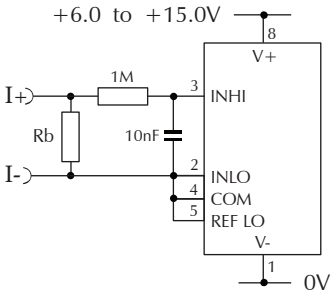

Measuring a current from a circuit which is floating with respect to the DPM's supply, i.e. the current and the meter's power supply are isolated from each other.
Ensure solder link LREF is closed.