M12 MALE 90° SELF WIREABLE SCREW TERMINAL

5-pol.max.0,75mm², 4-8mm cable diameter

Male 90°
5-pole
Clamping range cable entry: 4...8 mm

Plastic housings with good resistance against chemicals and oils. The resistance to aggressive media should be individually tested for your application. Further details on request.

Link to Product

Illustration



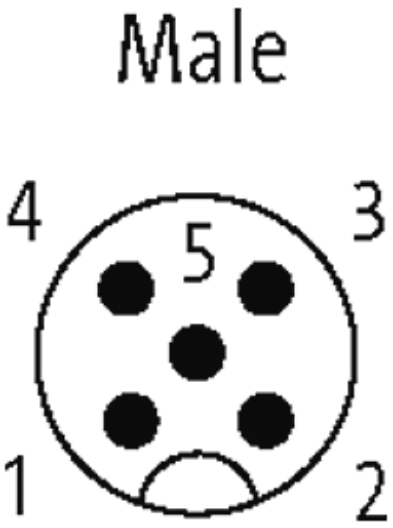

The information in this brochure has been compiled with the utmost care.
Liability for the correctness completeness and topicality of the information is restricted to gross negligence. Version: 11/14

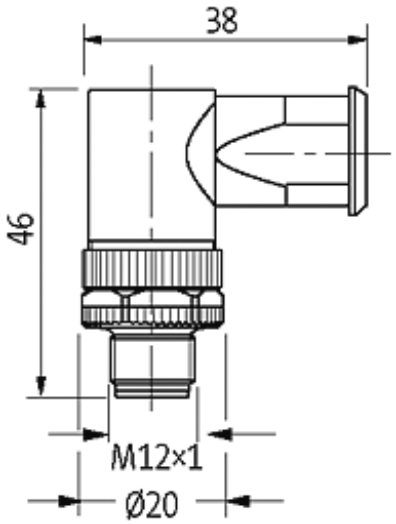

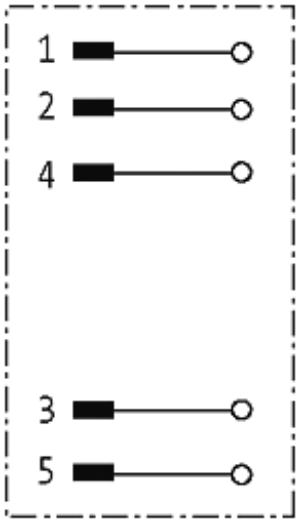

Product may differ from Image

Form	
	12851
Technical Data	
Operating voltage	max. 60 V AC/DC
Operating current per contact	max. 4 A
Connection cross section	0.14...0.75 mm²
Sealing range (cable diameter)	4...8 mm
Locking of ports	Screw thread M12 × 1 mm (recommended torque 0.6 Nm) self-securing
Protection	IP67 inserted and tightened (EN 60529)
General data	
Temperature range	-30...+85 °C
Commercial data	
country of origin	DE
customs tariff number	85369010

The information in this brochure has been compiled with the utmost care.
Liability for the correctness completeness and topicality of the information is restricted to gross negligence. Version: 11/14

minimum order quantity	1

The information in this brochure has been compiled with the utmost care.
Liability for the correctness completeness and topicality of the information is restricted to gross negligence. Version: 11/14