Single head system



UB500-30GM-E0-V15

Dimensions

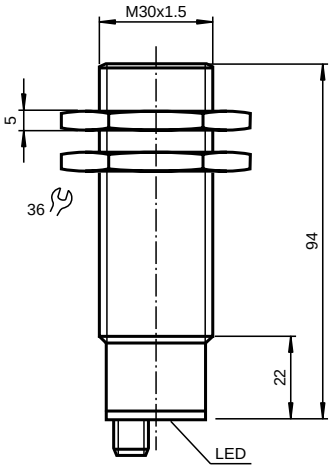

CE

Features

- Switch output
- 5 different output functions can be set
- TEACH-IN input
- Synchronisation options
- Deactivation option
- Watchdog

Technical data

General specifications		
Sensing range		60 ... 500 mm
Standard target plate		100 mm x 100 mm
Unusable area		0 ... 60 mm
Transducer frequency		approx. 380 kHz
Response delay		approx. 38 ms
Standard conformity		EN 60947-5-2
Indicating/Operating means		
LED green		"Power on", TEACH-IN function object detected
LED yellow		Indication of the switching state, Teach-in function-no object detected
LED red		"Error", object uncertain
Electrical specifications		
Rated operational voltage	U_e	20 ... 30 V DC, ripple ±10 $\%_{SS}$
No-load supply current	I_0	≤ 60 mA
Output		
Output type		1 switch output E0/E1, npn, normally open/closed, programmable
Rated operational current	I_e	200 mA, short circuit/overload protected
Voltage drop	U_d	≤ 3 V
Switching frequency	f	max. 13 Hz
Range hysteresis	H	≤ 1 % of the set operating distance
Repeat accuracy		≤ 1 %
Temperature influence		0.17 % / K
Input		
Input type		1 TEACH-IN input, operating distance 1: $-U_B$ ... $(-U_B + 2$ V) operating distance 2: $(+U_B - 2$ V) ... $+U_B$ 1 synchronous input level 0: $-U_B$ ... $(-U_B + 1$ V), level 1: $(-U_B + 5$ V) ... $+U_B$ Input impedance 27 kOhm
Pulse length		Synchronisation pulse: ≥ 100 µs Synchronisation pulse pause: ≥ 100 µs
Synchronisation frequency		
Common mode operation		≤ 150 Hz
Multiplex operation		≤ 150/n Hz, n = number of sensors
Ambient conditions		
Ambient temperature		-25 ... +70 °C (248 ... 343 K)
Storage temperature		-40 ... +85 °C
Mechanical specifications		
Protection degree		IP65 according to EN 60529
Connection type		connector V15
Material		
Housing		brass, nickel plated, plastic components PBT
Transducer		epoxy resin/hollow glass sphere mixture; polyurethane foam
Mass		145 g

Electrical connection

Standard symbol/Connections:
(version E0, npn)

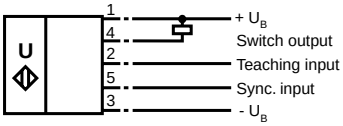

Ausgabedatum26.03.2001

Subject to reasonable modifications due to technical advances.
Copyright Pepperl+Fuchs, Printed in Germany
Pepperl+Fuchs Group • Tel.: Germany (06 21) 7 76-0 • USA (330) 4 25 35 55 • Singapore 7 79 90 91 • Internet http://www.pepperl-fuchs.com

Note

Model number

UB500-30GM-E0-V15

Function

Synchronisation

The sensor features a synchronisation input for the suppression of mutual interference. It can be synchronised by applying a square wave voltage. The falling edge of a synchronisation pulse at the synchronisation input starts a measuring cycle. A low level > 1 s or an open synchronisation input will result in the non-synchronised normal operation of the sensor. A high level at the synchronisation input disables the sensor. Synchronisation cannot be performed during TEACH-IN and vice versa. Two operating modes are possible:

1. Multiple sensors can be controlled by the same synchronisation signal. The sensors are synchronised.
2. The synchronisation pulses are sent cyclically to individual sensors. The sensors operate in multiplex mode.

Setting the switching points

The ultrasonic sensor features a switch output with two teachable switching points. These are set by applying the supply voltage -UB or +UB to the TEACH-IN input. The supply voltage must be applied to the TEACH-IN input for at least 1 s. LEDs indicate whether the sensor has recognised the target during the TEACH-IN procedure. Switching point A1 is taught with -UB, A2 with +UB.

Five different output functions can be set:

Function	TEACH-IN procedure
Window mode, close function	- Set object to near switching point - Teach switching point A1 with -UB - Set object to far switching point - Teach switching point A2 with +UB
Window mode, open function	- Set object to near switching point - Teach switching point A2 with +UB - Set object to far switching point - Teach switching point A1 with -UB
1 switching point, close function	- Set object to near switching point - Teach switching point A2 with +UB - Cover sensor or remove all objects from sensing range - Teach switching point A1 with -UB
1 switching point, open function	- Set object to near switching point - Teach switching point A1 with -UB - Cover sensor or remove all objects from sensing range - Teach switching point A2 with +UB
Detection of object presence	- Cover sensor or remove all objects from sensing range - Teach switching point A1 with -UB - Teach switching point A2 with +UB

Default setting of switching points: A1 = blind range, A2 = nominal distance

Displays in dependence on operating mode	Green LED	Red LED	Yellow LED
Teach switching point Object detected No object detected Object uncertain (TEACH-IN invalid)	 Flashing Flashing Off	 Off Off Flashing	 Off On Off
Normal operation	On	Off	Switching state
Interference (e.g. compressed air)	Off	Flashing	Previous state

Characteristic curves/ Additional information

Characteristic response curves

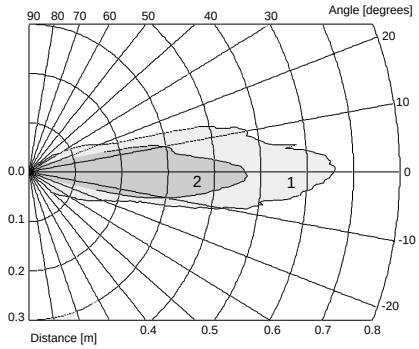

Curve 1: flat plate 100 mm x 100 mm
Curve 2: round bar, Ø 25 mm

Programmed switching output function

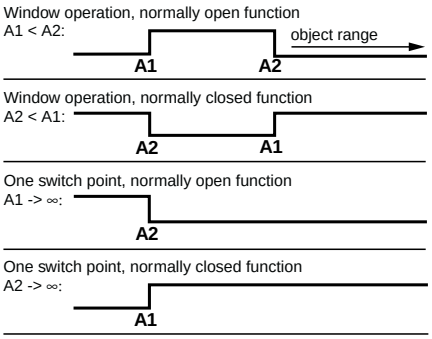

A1 -> ∞, A2 -> ∞: Detection of presence of object
Object detected: Switch output closed
No object detected: Switch output open

LED-Window

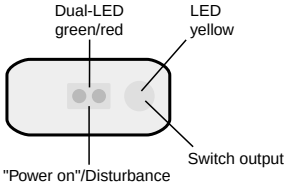

Ausgabedatum26.03.2001

Subject to reasonable modifications due to technical advances.
Copyright Pepperl+Fuchs, Printed in Germany