Overview 0
Cabinets 1
Wall mounted cases 2
Accessories for cabinets and wall mounted cases 3
Climate control 4
Desk-top cases 5
Subracks/ 19" chassis . . . 6
Front panels, plug-in units . . 7
Systems 8
Power supply units 9
Backplanes . . 10
Connectors, front panel component system 11
Appendix 12

Desk-top cases – comptec



02202003

Standards

- Internal dimensions in accordance with IEC 60297-3-100
- Type of protection IP 20 in accordance with IEC 60529
- Protective ground connections in accordance with:
  DIN EN 50178/VDE 0160
  DIN EN 60950/VDE 0805
  DIN EN 61010-1/VDE 0411 part 1
  DIN EN 61010-1A2/VDE 0411 part 1/A1

Downloads and further important information can be found on the Internet under www.schroff.biz

Overview 5.100

Case to accept 19" subracks or 19" chassis

- Internal assemblies of up to 40 kg
- Up to six rows of ventilation slots in the base plate for optimal air inlet
- High stability
- Front and rear identical, depth-symmetrical construction
- With handle strip or recessed grip



02202004



02202005

Case

- Al die-cast frame front and rear
- Top cover and base plate can be subsequently removed
- Top cover and base plate fitted with hidden GND/earth connections
- Case height 3, 4, 6, 7 and 9 U (cladding parts in steel)
- Case height 9 U and 12 U (cladding parts in aluminium)



30407004

ServicePLUS from page 5.4

e.g. modifications (cut-outs, special colours)
e.g. custom solutions (special sizes)

e.g. assembly service from 1 piece

www.schroff.biz/ServicePLUS

comptec
3, 4 U, St 5.102
6, 7, 9 U, St 5.103
9, 12 U, Al 5.104

Accessories
Folding handle 5.105
Slide rails 5.105
Earthing kit 5.106
Assembly kit 5.106
Tip-up feet 5.107

ServicePLUS . . 5.4

19" case, 3 U, 4 U



02202001

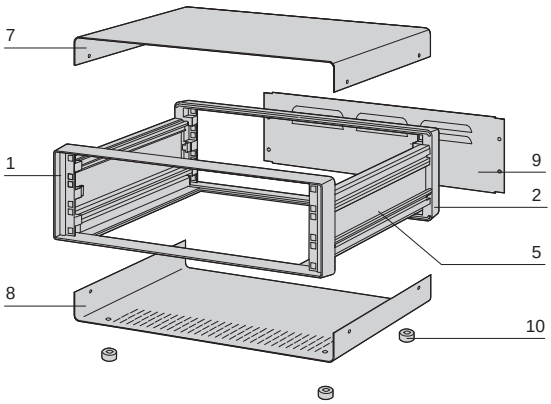

CTTP0001

Front view

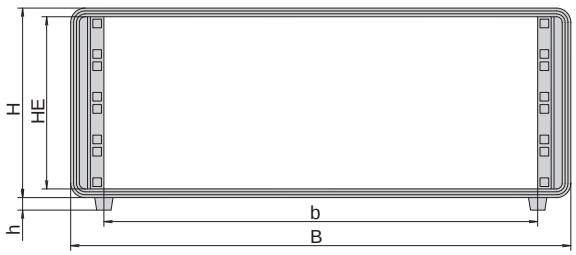

CTA30677

h = case foot height, HE = U, internal usable height

Side view

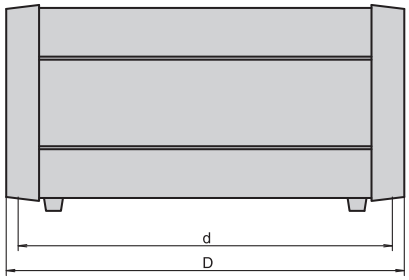

CTA42313

Usable width b = B - 69 mm, h = height of case foot

- Desk-top case (pre-fitted)
- Top cover, base plate and rear panel in steel
- Front and rear frames in die-cast Al
- Ventilation slits in base plate
- Ventilation gills in rear panel
- Side panel with integral handle function

Delivery comprises (kit)

Item	Qty	Description
1	1	Front frame, Al die-cast, RAL 7016, with 19" grid
2	1	Rear frame, Al die-cast, RAL 7016, with 19" grid
5	2	Side panel, Al extrusion, RAL 7016
7	1	Cover plate, Al, 1 mm, RAL 9006, with GND/earthing tag
8	1	Base plate, Al, 1 mm, RAL 9006, with GND/earthing tag
9	1	Rear panel, St, 1 mm, RAL 9006, with GND/earthing tag
10	4	Case foot with anti-slip protection, PC, black, UL 94 V-0
11	1	Assembly kit

Items 1, 2, 5 and 9 fitted.

Order Information

Height H		h	Depth D	Usable depth d	Width B	Part no.
U	mm	mm	mm	mm	mm	
3	153	13.0	300	276	520	10225-601
3	153	13.0	400	376	520	10225-612
3	153	13.0	500	476	520	10225-623
4	198	13.0	300	276	520	10225-602
4	198	13.0	400	376	520	10225-613
4	198	13.0	500	476	520	10225-624

Note

- Please order GND/earthing kit separately, see page 5.106
- The case foot, item 10, can be replaced by a tip-up foot, see page. 5.107
- Please order slide rails separately, see page 5.105

For further information www.schroff.biz/oneclick
oneClick search code = Part no.

ServicePLUS see page 5.4

19" case, 6 U, 7 U, 9U



02202002

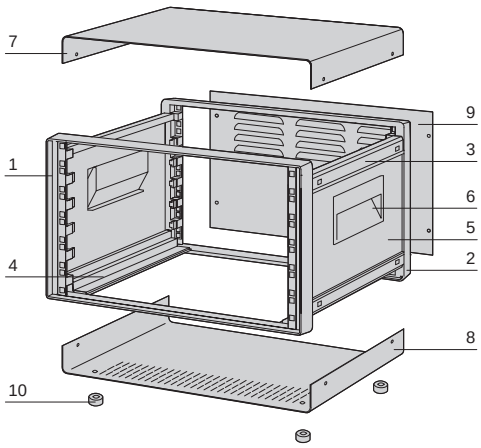

CTTP0002

Front view

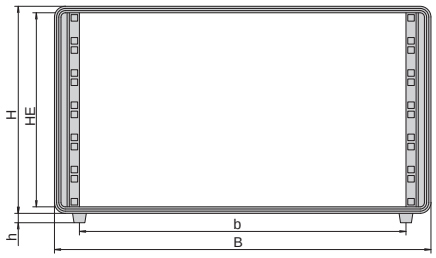

CTA30676

h = case foot height, HE = U, internal usable height

Side view

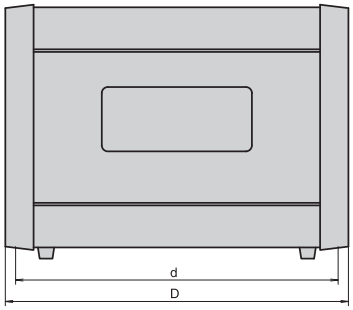

CTA42312

Usable depth d = D - 24 mm

- Desk-top case (pre-fitted)
- With handle shell
- Top cover, base plate and rear panel in steel
- Front and rear frames in die-cast Al
- Ventilation slits in rear panel and base

Delivery comprises (kit)

Item	Qty	Description
1	1	Front frame, Al die-cast, RAL 7016, with 19" grid
2	1	Rear frame, Al die-cast, RAL 7016, with 19" grid
3	2	Side profile at top, Al extrusion, RAL 7016
4	2	Side profile at bottom, Al extrusion, RAL 7016
5	2	Side panel, St, 1.5 mm, RAL 9006, with GND/earthing tag
6	2	Handle shell, PC, RAL 7016, UL 94 V-0, load-carrying capacity: 60 kg/pair
7	1	Cover plate, St, 1 mm, RAL 9006, with GND/earthing tag
8	1	Base plate, St, 1 mm, RAL 9006, with GND/earthing tag
9	1	Rear panel, St, 1 mm, RAL 9006, with GND/earthing tag
10	4	Case foot with anti-slip protection, PC, black, UL 94 V-0
11	1	Assembly kit

Items 1, 2, 3, 4, 5, 6 and 9 fitted.

Order Information

Height H		h	Depth D	Usable depth d	Width B	Part no.
U	mm	mm	mm	mm	mm	
6	286	13	300	276	520	10225-604
6	286	13	400	376	520	10225-615
6	286	13	500	476	520	10225-626
6	286	13	600	576	520	10225-637
7	331	13	400	376	520	10225-616
7	331	13	500	476	520	10225-627
7	331	13	600	576	520	10225-638
9	420	13	400	376	520	10225-618
9	420	13	500	476	520	10225-629
9	420	13	600	576	520	10225-640

Note

- Please order GND/earthing kit separately, see page 5.106
- The case foot, item 10, can be replaced by a tip-up foot, see page 5.107
- Please order slide rails separately, see page 5.105
- Handle shell, item 6, can be replaced by a folding handle, see page 5.105

For further information www.schroff.biz/oneclick
oneClick search code = Part no.

ServicePLUS see page 5.4

19" cases 9 and 12 U, aluminium



02202006

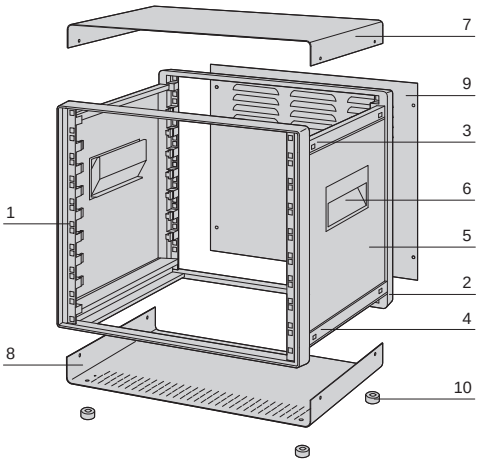

CTTP0003

- Desk-top case (pre-fitted)
- With handle shell
- Top cover, base plate and rear panel in Al
- Front and rear frames in die-cast Al
- Ventilation slots in base plate
- Air vents in rear panel

Delivery comprises (kit)

Item	Qty	Description
1	1	Front frame, Al die-cast, RAL 7016, with 19" grid
2	1	Rear frame, Al die-cast, RAL 7016, with 19" grid
3	2	Side profile at top, Al extrusion, RAL 7016
4	2	Side profile at bottom, Al extrusion, RAL 7016
5	2	Side panel, Al, 1.5 mm, RAL 9006, with GND/earthing tag
6	2	Handle shell, PC, RAL 7016, UL 94 V-0, load-carrying capacity: 60 kg/pair
7	1	Cover plate, Al, 1 mm, RAL 9006, with GND/earthing tag
8	1	Base plate, Al, 1 mm, RAL 9006, with GND/earthing tag
9	1	Rear panel, Al, 1 mm, RAL 9006, with GND/earthing tag
10	4	Case foot with anti-slip protection, PC, black, UL 94 V-0
11	1	Assembly kit

Items 1, 2, 3, 4, 5, 6 and 9 fitted.

Front view

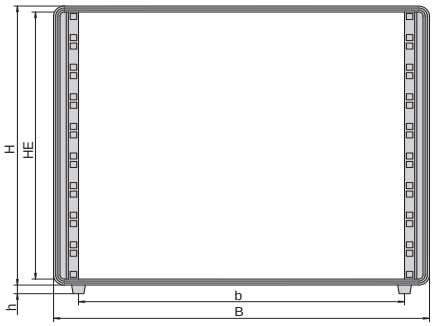

CTA30679

Usable width b = B - 69 mm, h = height of case foot

Side view

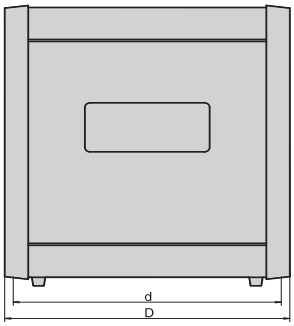

CTA42314

Usable depth d = D - 24 mm

Order Information

Height H	h	Depth D	Usable depth d	Width B	Part no.
U	mm	mm	mm	mm	
9	420	13	400	376	520	10225-667
9	420	13	500	476	520	10225-682
9	420	13	600	576	520	10225-693
12	553	13	400	376	520	10225-670
12	553	13	500	476	520	10225-685
12	553	13	600	576	520	10225-696

Note

- Please order GND/earthing kit separately, see page 5.106
- The case foot, item 10, can be replaced by a tip-up foot, see page 5.107
- Please order slide rails separately, see page 5.105
- Handle shell, item 6, can be replaced by a folding handle, see page 5.105

For further information www.schroff.biz/oneclick
oneClick search code = Part no.

ServicePLUS see page 5.4

Part number in bold face type: ready for despatch within 2 working days
Part number in normal type: ready for despatch within 10 working days

Folding handle

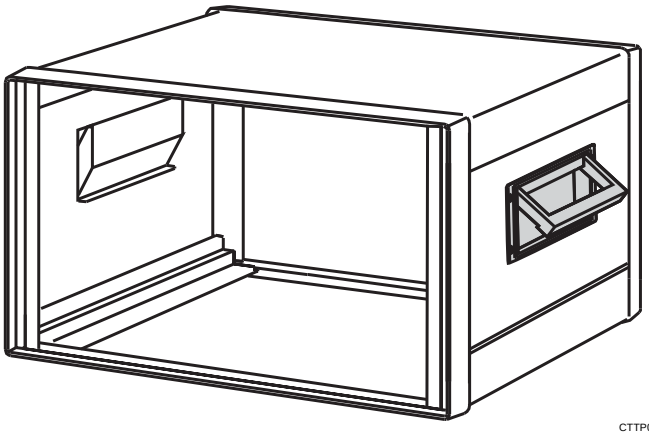

CTTP0006

- Folding handles can be used instead of the pre-fitted handle shells
- Load-carrying capacity: 50 kg/pair

Delivery comprises (kit)

Item	Qty	Description
1	2	Folding handle, Al die-cast, RAL 7016
2	1	Assembly kit

Order Information

Description	Part no.
Folding handle	20225-439

For further information www.schroff.biz/oneclick
oneClick search code = Part no.

Slide rails

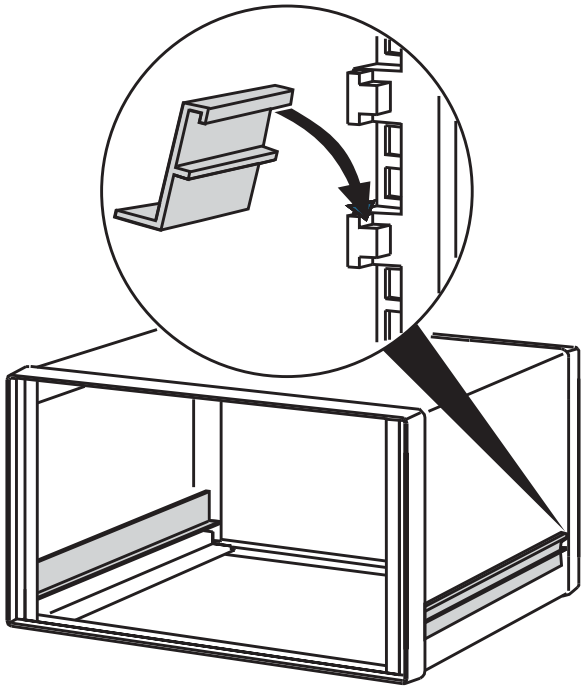

CTTP0005

- Slide rails are suitable as support for 19" subracks and 19" chassis

Delivery comprises

Item	Qty	Description
1	1	Slide rail, Al extrusion, anodised, cut edges plain, static load-carrying capacity 10 kg

Order Information

For case depth mm	Part no.
300	30225-089
400	30225-090
500	30225-091
600	30225-092

Note

- 2 slide rails are required per subrack or 19" chassis
- Slide rail cannot be used for shielded 19" subracks; special slide rails available on request

For further information www.schroff.biz/oneclick
oneClick search code = Part no.

GND/earthing kit

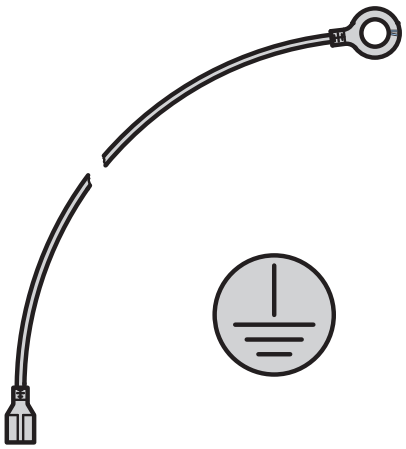

aza43284

- The GND/earthing kit allows VDE compliant earthing of cases in accordance with:
  EN 50178/VDE 0160
  EN 60950/VDE 0805
  EN 61010-1/VDE 0411 part 1
  EN 61010-1A2/VDE 0411 part 1/A
- VDE tested

Delivery comprises (kit)

Item	Qty	Description
1	1	GND/earthing kit, Cu wire, 1.5 mm^2, PVC sheathing, green/yellow, connects side panels, cover, base plate and rear panel

Order Information

Description	Up to 4 U Part no.	bigger than 4 U Part no.
GND/earthing kit for cases with steel covers	21100-490	21100-448
GND/earthing kit for cases with aluminium covers	–	21100-347

For further information www.schroff.biz/oneclick
oneClick search code = Part no.

19" fixing

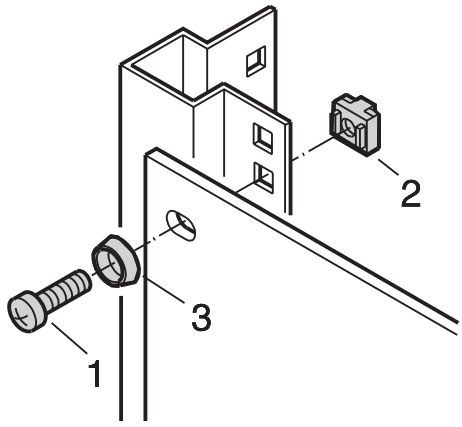

SC128XXX

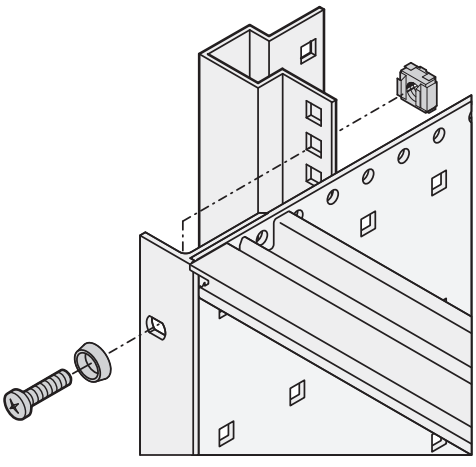

06108055

- For fitting subracks or 19" chassis in a comptec case
- For fixing 19" front panels

Delivery comprises

Item	Description
1	Screw M6 × 16, zinc-plated with Pozidrive
2	Cage nut M6, zinc-plated
3	Plastic washer, ABS, black

Order Information

Description	Part no.
PU = 8 × screw, washer, nut	21100-435
PU = 50 each of M6 screw, washer and cage nut	21101-809
PU = 100 each of M6 screw, washer and cage nut	21101-810

For further information www.schroff.biz/oneclick
oneClick search code = Part no.

Plastic tip-up feet

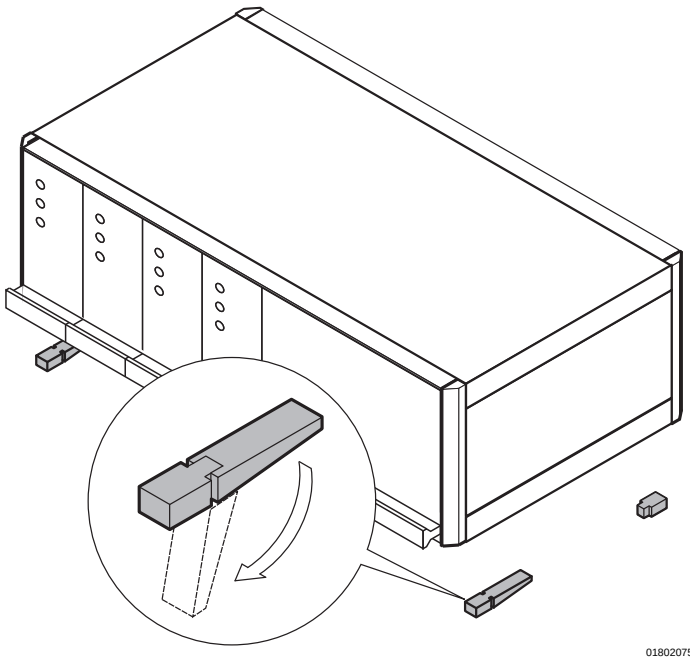

- Static load-carrying capacity 25 kg per foot
- Tip-up feet can be used instead of the case feet fitted as standard
- Fixing holes provided in bottom of case

Delivery comprises (kit)

Item	Qty	Description
1	4	Foot, PA, UL 94 V-0
2	4	Anti-slip protection, TPE
3	2	Tip-up device, PA, UL 94 V-0
4	1	Assembly kit

Order Information

Description	RAL 7016 anthracite Part no.	RAL 9006 silver Part no.
Plastic tip-up foot	20603-002	20603-001

For further information www.schroff.biz/oneclick
oneClick search code = Part no.

Tip-up foot in die-cast Al

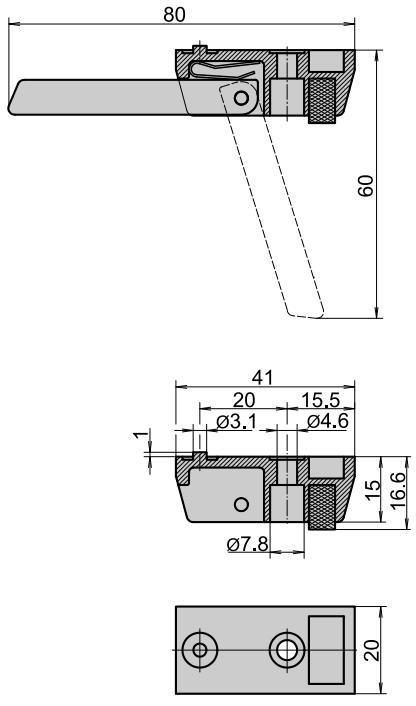

- Static load-carrying capacity 50 kg per foot
- Tip-up feet can be used instead of the case feet fitted as standard
- Fixing holes provided in bottom of case

Order Information

Description	Qty	Part no.
Foot with tip-up, Al die-cast, silver	1 piece (SPQ 10)[1)]	10603-002
Foot without tip-up, Al die-cast, silver	1 piece (SPQ 10)[1)]	10603-001
Cheesehead screw with slot M4 × 12, St, zinc-plated, PU 100 pieces		21101-211
Hexagon nut M4, St, zinc-plated, PU 100 pieces		21100-211
Spring washer A4, St, zinc-plated, PU 100 pieces		21100-207

1) Part no. comprises 1 piece;
delivery is in standard pack quantity (SPQ):
please order a minimum of 10 feet or a multiple

For further information www.schroff.biz/oneclick
oneClick search code = Part no.