MURR ELEKTRONIK
stay connected

Impact67 PN DIO14 IOL2 IRT 7/8" 5pin

Digital inputs/outputs
DIO14 IOL2 (IRT)
Ethernet 10/100 Mbit/s; M12, D-coded
7/8", 5-pole, 2× max. 9 A
M12, 5-pole, A-coded
IO-Link Master V1.1.2
Connection cables are in the online shop under "Connection Technology".
Housing fully potted.

Link to Product

Illustration



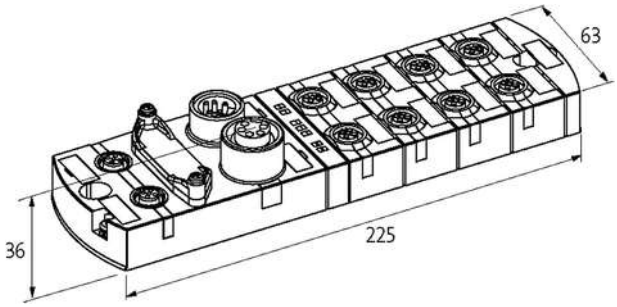

Product may differ from Image

General data	
Mounting method	2-hole screw mounting, compatible with I/O modules of MVK model range
Temperature range	-25...+55 °C (storage temperature -25...+70 °C)
Protection	IP67
Dimensions H×W×D	39×63×225 mm
Output	
Lamp load	10 W
Actuator supply UA	24 V DC (EN 61131-2), max. 9 A
Switching current per output	max. 1.6 A (short-circuit and overload protected)
Input	
Sensor supply US	24 V DC (EN 61131-2), max. 200 mA (M12 female)/max. 1 A (IO-Link female), short-circuit and overload protected
Type	for 3-wire sensors or mechanical switches, PNP, IO-Link Devices
IO-Link	
Port Class	Class B (not galvanically separated)
IO-Link	2× Master
Transfer parameters	32 Byte (In) 32 Byte (Out) per IO-Link port
Operating modes	COM1; COM2; COM3 (automatic)
Parameterization	
PIN 4	Input/Output (port X0...X7); IO-Link Master (port X5, X7)
PIN 2	Input/Output (port X0...X7); U-Actuator IO-Link Class B (port X5, X7)
Connections	
Fieldbus	Ethernet 10/100 Mbit/s; M12, D-coded

The information in this brochure has been compiled with the utmost care.
Liability for the correctness completeness and topicality of the information is restricted to gross negligence. Version: 01/22

Sensor-system/actuator supply	7/8", 5-pole, 2× max. 9 A
I/O ports	M12, 5-pole, A-coded
PROFINET	
Specification	V2.3, Conformance Class C (IRT)
Addressing	DCP
FSU (Fast-Start-Up)	max. 500 ms
PROFINET Netload Class	III
Shared Device	yes, for 2 controls
Diagnostic	
Communication status	via LED
Diagnostic via LED	per module and channel
Diagnostic via BUS	per module and channel
Actuator warning	per channel via LED and BUS
Monitoring - under voltage	yes
Monitoring - no voltage	yes
Cable break	per port
Commercial data	
country of origin	DE
customs tariff number	85389099
EAN	4048879585460
eClass	27242604
Packaging unit	1.000

The information in this brochure has been compiled with the utmost care.
Liability for the correctness completeness and topicality of the information is restricted to gross negligence. Version: 01/22