Brand of NTN Group

Technical data

CUC206

Insert bearings



Cylindrical outer diameter, fixing by socket set screw, seal with slinger

VISUAL (S)

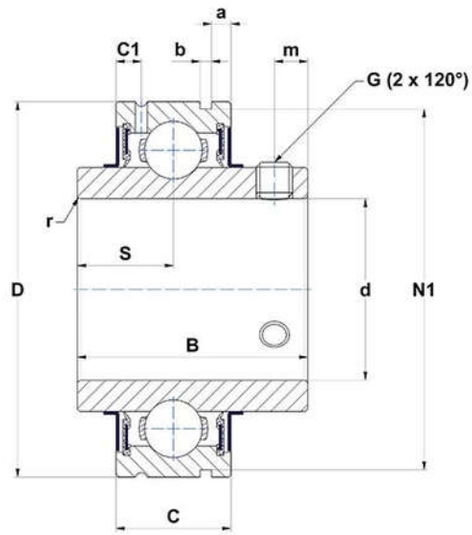

PRODUCT DEFINITION

Brand	SNR
a - Distance to grooves in OR	3,2 mm
b - Groove width in OR	1,9 mm
B - Width of Inner Ring	38,1 mm
C - Width of Outer Ring	19 mm
C1 - Distance center of OR to center of lubrication zone	4,2 mm
d - Shaft diameter	30 mm
D - Outer diameter of OR	62 mm

CUC206
Insert bearings

PRODUCT DEFINITION	
G - Set screw size	M6x1
m - Distance to set screw	5,5 mm
N1 - Groove dia in OR	59,61 mm
r - Radius Inner Ring	0.6
S - Distance front side/bearing centre	15,9 mm
f0 - Factor	13.7
SW - Wrench size	3 mm

PRODUCT PERFORMANCE	
C - Dynamic load rating	19500000 mN
C0 - Static load rating	11200000 mN
Operating temperature min.	253,15 °K
Operating temperature max.	373,15 °K

OTHER FEATURES	
Mass	0,35 kg
Recommended tightening torque for set screw	5.5 N-m

BEARING FREQUENCIES	
BPFO - Over rolling frequency on outer ring (60 rpm)	3.56820652173913 Hz
BPFI - Over rolling frequency on inner (60 rpm)	5.43179347826087 Hz
BSF - Over rolling frequency on rolling element (60 rpm)	4.62233110806801 Hz
BRF - Rotational frequency – rolling element (60 rpm)	2.311165554034 Hz
FTF - Rotational frequency - cage (60 rpm)	0.396467391304348 Hz