Issued July 1997 **1200001052**
10727

Speedfit® plastic push-in fittings. Tank connector

Instruction Leaflet

RS **stock no. 754-836 and 754-842**

Speedfit® plastic push-in fittings, pipe and valves should not be use for gas, fuel oil or compressed air applications.

Figure 1

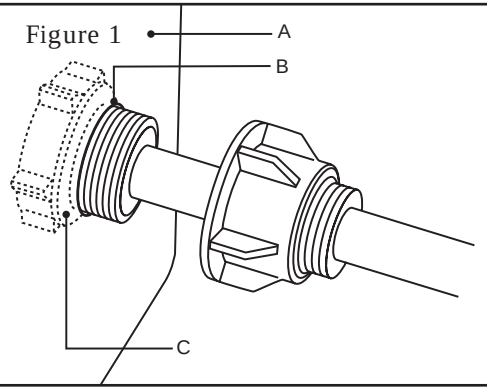

A - Cold water tank
B - Hole diameter
15mm pipe 29mm
22mm pipe 35mm
C - Washer

Suitable for cold water tanks only

Using the Speedfit tank connector, unscrew the nut and push the body of the fitting through the tank hole with the washer on the inside of the tank. Hand tighten the nut onto the body.

Note: Hand tightening the nut onto the body is all that is required. Further mechanical tightening will damage the fitting.

Making a connection

Figure 2

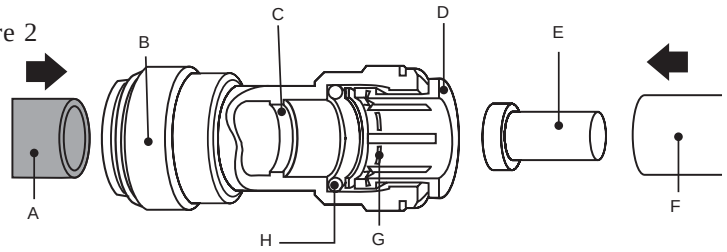

A - Copper pipe
B - Equal straight connector
C - Pipe stop
D - Collet
E - Pipe insert
F - Plastic pipe
G - Stainless steel teeth
H - 'O' ring

Do not insert fingers into fitting as the stainless steel teeth incorporated within the collet may cause injury.
Cut the pipe square, ensuring it is free of score marks, burrs and sharp edges. It is recommended for installations using plastic pipe, that pipe inserts are used (fig. 2). Push the pipe into the fitting to the internal pipe stop (fig. 2). The collet has stainless steel teeth which grip the pipe, whilst the 'O' ring provides a permanent leak-proof seal.
Pull on the pipe to check it is secure. It is good practice to test the system prior to leaving site and/or before use.

Disconnecting a fitting

Figure 3

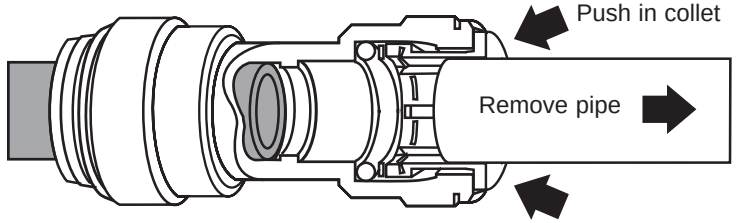

Ensure tank is empty before removing fitting. Push in collet squarely against face of fitting. With the collet held in this position, the pipe can be withdrawn.

The information provided in RS technical literature is believed to be accurate and reliable; however, RS Components assumes no responsibility for inaccuracies or omissions, or for the use of this information, and all use of such information shall be entirely at the user's own risk.
No responsibility is assumed by RS Components for any infringements of patents or other rights of third parties which may result from its use.
Specifications shown in RS Components technical literature are subject to change without notice.

RS Components, PO Box 99, Corby, Northants, NN17 9RS Telephone: 01536 201234
An Electrocomponents Company
© RS Components 1997