

- **Simple flange mounting with 8 mm „D“ hollow-shaft**
- **Conductive plastic track for durability**
- **Multi-fingered wipers for excellent contact under vibration**
- **Long life: 5 x 10^6 cycles**
- **Sealed to IP66**
- **Wide temperature range**

The VTP11 rotary position sensor combines well-proven resistive element technology and conventient 8 mm D-shaft mounting in a durable and low cost package that ensures reliable and long-life operation for high performance motorports - especially for throttle position sensing.
The conductive plastic track and multi-fingered wiper assembly has been designed to maintain full sensing contact even in the most arduous shock and vibration conditions.
The VTP11 will suit a wide variety of motorsports and specialist vehicle position sensing applications including throttle, steering angle, suspension and sequential gearbox.

Specifications	
Construction	Conductive plastic track with multi-fingered wipers
Life expectancy	5 x 10^6 cycles
Mechanical rotation	112° max
Electrical rotation	97° ± 3°
Linearity	± 1%
Supply voltage	5...24 VDC
Resistance value	5 kΩ ±20%
Environmental sealing	IP66
Temperature range	-25 to +125°C (peaks of 150° C for 15 mins)
Housing material	Glass-filled PBT

Dimensions (in mm) and wiring

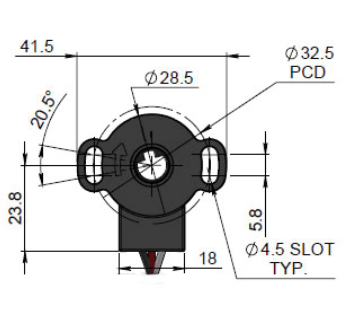

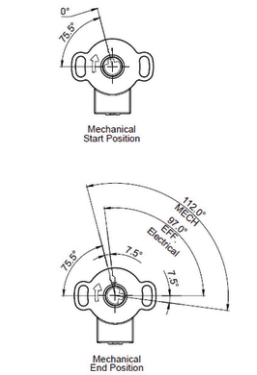

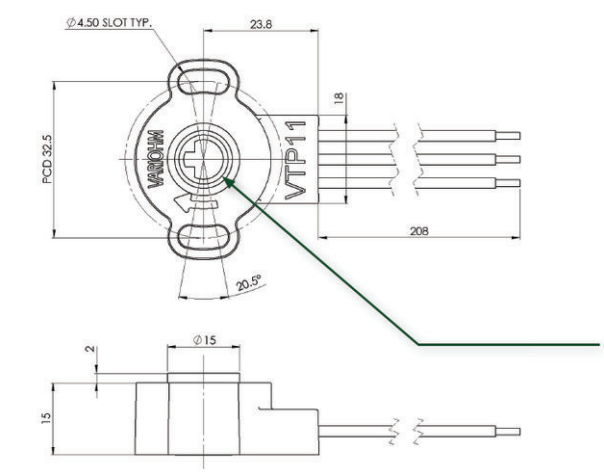

VTP11 Drive shaft detail

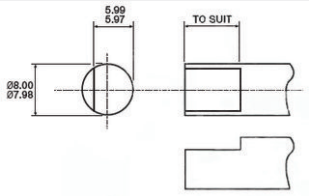

Wiring	
Red	Signal
Black	0 V Supply (Ground)
White	5 - 24 VDC Supply