# E11819

## Fixing strap for clean-line cylinders

FIXING STRAP CLEAN-LINE CYL

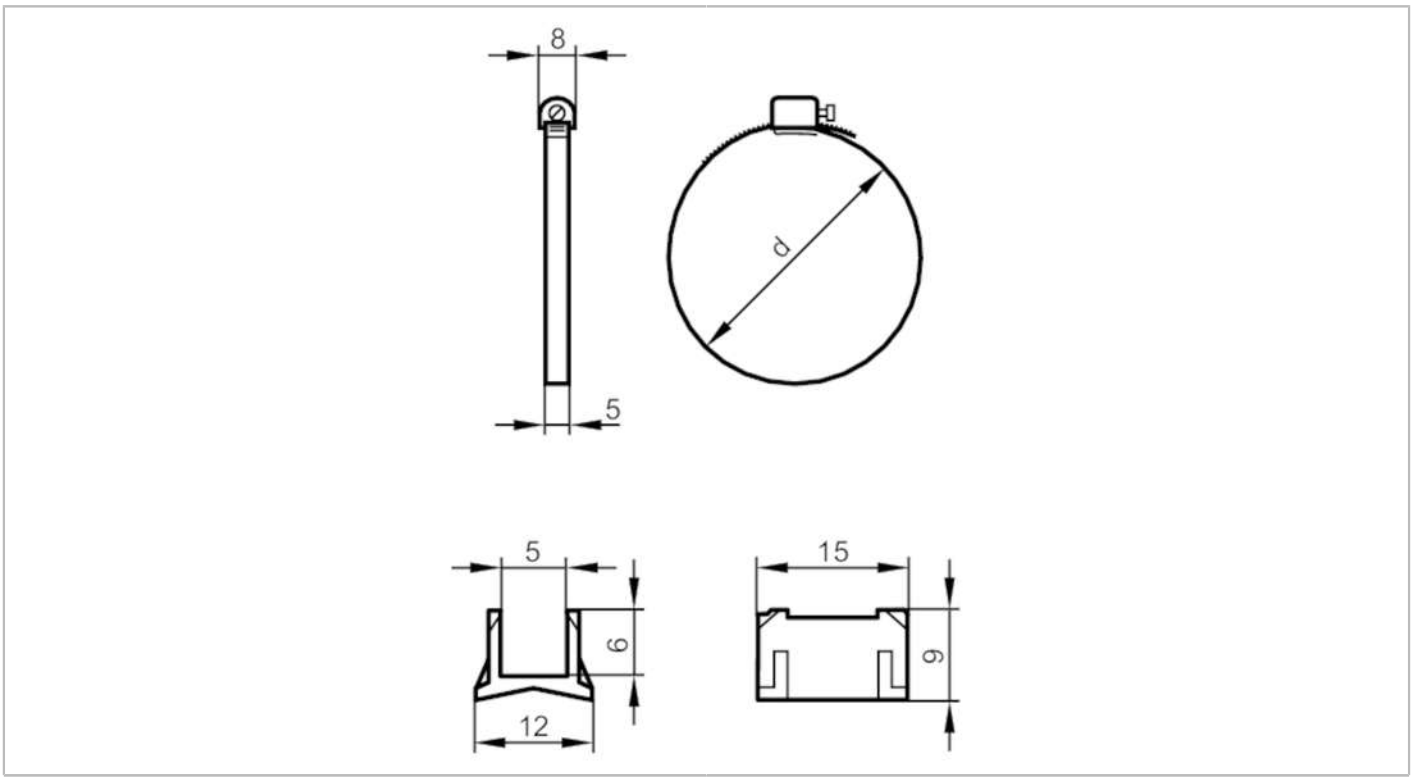


| | | |
|---|---|---|
| **Application** | | |
| Design | | for types MKT |
| **Mechanical data** | | |
| Weight | [g] | 7.4 |
| Dimensions | [mm] | Ø 40 |
| Materials | | Adapter: PA; fixing strap: stainless steel (1.4305 / 303) |
| Piston diameter | [mm] | 40 |
| Clamping range | [mm] | 38...49 |
| **Accessories** | | |
| Items supplied | | Adapter: 1x, for types, MKT |
| | | Fixing strap for clean-line cylinders: 1x |
| **Remarks** | | |
| Pack quantity | | 1 pcs. |