OG0028

Through-beam sensor transmitter

OGS-OOOA

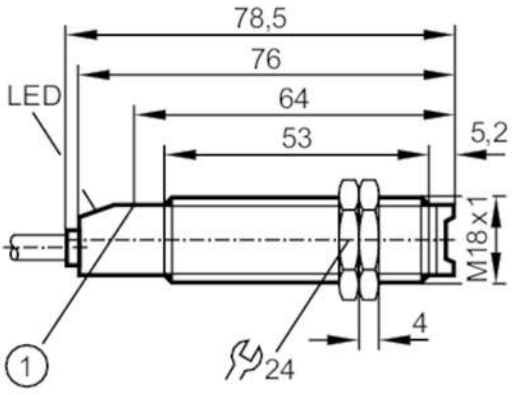

1 pushbutton without function

Product characteristics		
Type of light		infrared light
Housing		threaded type
Application		
Function principle		Through-beam sensor
Electrical data		
Frequency AC	[Hz]	47...63
Operating voltage	[V]	20...250 AC/DC
Current consumption	[mA]	< 5
Protection class		II
Type of light		infrared light
Wave length	[nm]	880
Outputs		
Short-circuit protection		no
Overload protection		no
Detection zone		
Transmitter / receiver		transmitter
Range	[m]	< 15
Range adjustable		no
Max. light spot diameter	[mm]	2000
Light spot dimensions refer to		at maximum range
Operating conditions		
Ambient temperature	[°C]	-25...80
Protection		IP 67
Tests / approvals		
EMC		EN 60947-5-2
		EN 55011 class B
MTTF	[years]	1662

OG0028

Through-beam sensor transmitter

OGS-OOOA

Mechanical data			
Weight	[g]		120.9
Housing			threaded type
Dimensions	[mm]		M18 x 1 / L = 78.5
Thread designation			M18 x 1
Materials			PBT
Lens material			PMMA
Displays / operating elements			
Display		operation	1 x LED, green
Accessories			
Items supplied			lock nuts: 2
Remarks			
Pack quantity			1 pcs.

Electrical connection

Cable: 2 m, PVC; 2 x 0.5 mm²

Connection

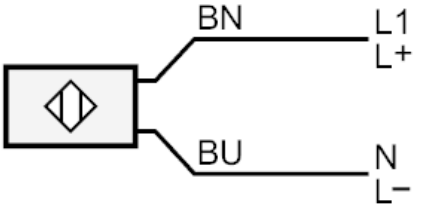

	Core colours :
BN =	brown
BU =	blue