Precision pressure regulator, Series PR1-RGP

2024-04-05

R412010259

AVENTICS Series PR1 Precision pressure regulators

The AVENTICS Series PR1/PR2 is designed for applications that demand fast responses to the slightest fluctuation in compressed air. They can be adjusted precisely and are an alternative to electronic pressure regulators. Precision pressure regulators are used to achieve extremely accurate pressure control independent from the pilot pressure and the flow rate. They offer high performance and flexibility, combined with increased reliability.



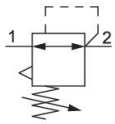

Technical data

Industry	Industrial
Function	Precision pressure regulator
Parts	Precision pressure regulator
Mounting orientation	Any
Regulator type	Diaphragm-type pressure regulator
Port	G 1/4
Nominal flow Qn	480 l/min
Min. regulation range	0.1 bar
Max. regulation range	1 bar
Min. working pressure	0.5 bar
Max. working pressure	16 bar
Min. ambient temperature	-10 °C
Max. ambient temperature	60 °C
Activation	Mechanical
Version	Regulator without pressure gauge
Regulator function	with relieving air exhaust
Pressure supply	single
Medium	Compressed air Neutral gases
Recommended pre-filtering	5 µm

Weight	1.02 kg

Material

Housing material	Die cast zinc
Seal material	Acrylonitrile butadiene rubber
Part No.	R412010259

Technical information

The pressure dew point must be at least 15 °C less than ambient and medium temperature and may not exceed 3 °C.

Relieving exhaust (≤ 10 mbar over set pressure)

Mounting: mounting bracket R412004872 or installation in piping

Notice: This product may only be operated with oil-free, dry compressed air.

Internal air consumption depending on adjustment range

Suitable for use in Ex zones 1, 2, 21, 22.

Nominal flow with secondary pressure 0,8 bar at Δp = 0,2 bar

Dimensions in mm

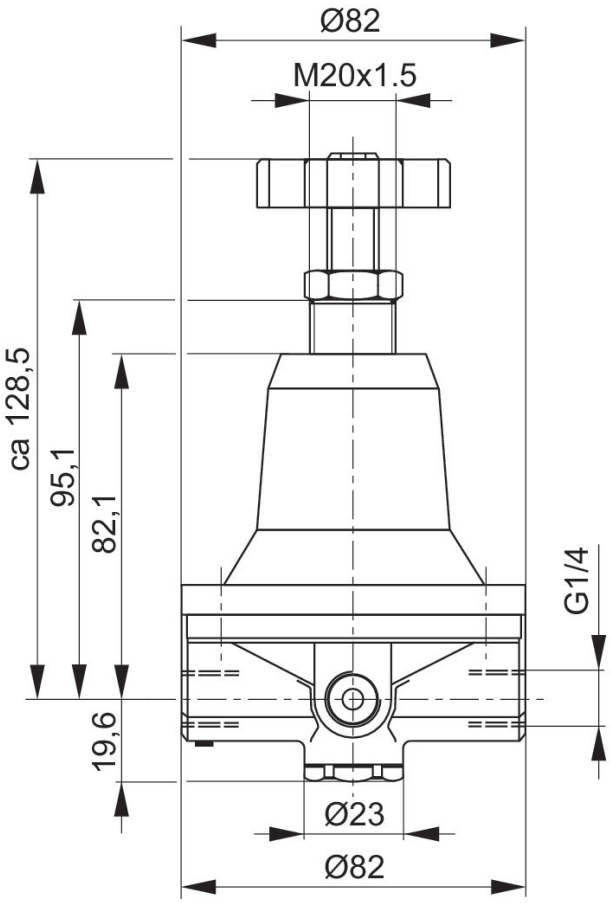

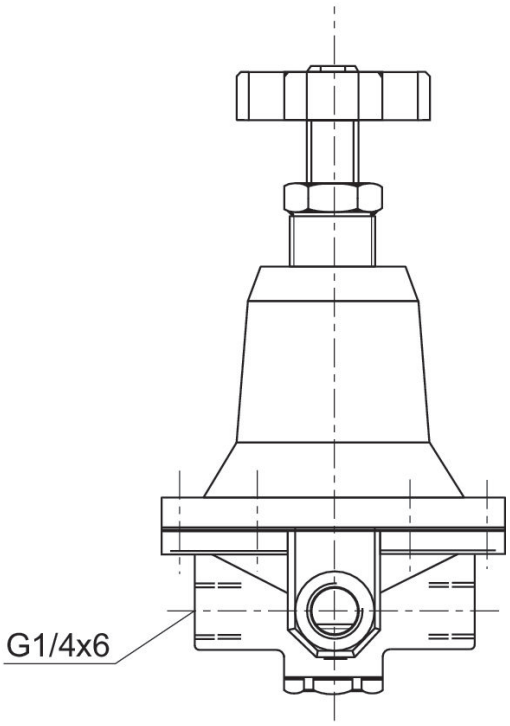

Pressure characteristics curve

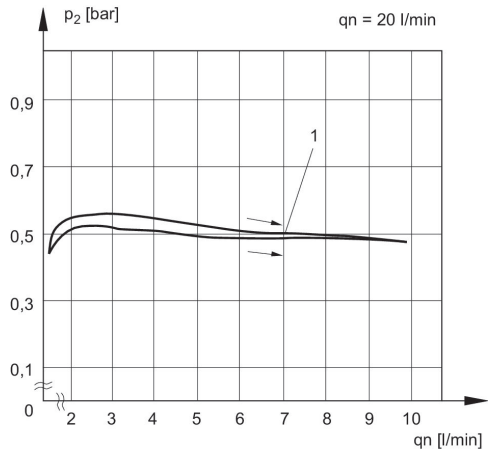

p1 = Working pressure
p2 = Secondary pressure
qn = Nominal flow
1) Starting point

Flow rate characteristic, p2 = 0,05 - 7 bar

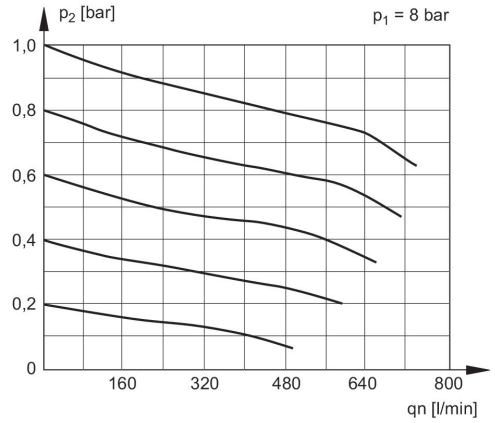

p1 = Working pressure
p2 = Secondary pressure
qn = Nominal flow