Product datasheet

Specifications



photo-electric sensor - XUM - BGS - Sn 0.3m - 12..24VDC - cable 2m

XUM8ANCNL2

Main

Range of product	Telemecanique Photoelectric sensors XU
Series name	General purpose single mode
Electronic sensor type	Photo-electric sensor
Sensor name	XUM
Sensor design	Miniature
Detection system	Diffuse with background suppression
Material	Plastic
Type of output signal	Discrete
Supply circuit type	DC
Wiring technique	3-wire
Discrete output type	NPN
Discrete output function	1 NO or 1 NC programmable
Electrical connection	Cable
Cable length	2 m
Product specific application	-
Emission	Red diffuse with background suppression
[Sn] nominal sensing distance	0.3 m diffuse with background suppression

Complementary

Enclosure material	PBT
Lens material	PC
Maximum sensing distance	0.3 m diffuse with background suppression
Output type	Solid state
Wire insulation material	PVC
Status LED	1 LED (green) for instability 1 LED (orange) for output state
[Us] rated supply voltage	12...24 V DC with reverse polarity protection
Supply voltage limits	10…30 V DC
Switching capacity in mA	<= 100 mA (overload and short-circuit protection)

Disclaimer: This documentation is not intended as a substitute for and is not to be used for determining suitability or reliability of these products for specific user applications

Maximum voltage drop	<2 V (closed state)
Current consumption	<= 20 mA no-load
Maximum delay first up	100 ms
Maximum delay response	1 ms
Setting-up	Sensitivity adjustment by potentiometer
Depth	20 mm
Height	33 mm
Length	11 mm
Width	11 mm
Net weight	0.035 kg

Environment

Product certifications	CE cURus
Ambient air temperature for operation	-25…55 °C
Ambient air temperature for storage	-30…70 °C
Immunity to ambient light	3000 lux natural light 3000 lux incandescent light
Vibration resistance	20 gn, amplitude = +/- 1.5 mm (f = 10…500 Hz) conforming to IEC 60068-2-6
Shock resistance	50 gn (duration = 11 ms) conforming to IEC 60068-2-27
IP degree of protection	IP67 conforming to IEC 60529

Packing Units

Unit Type of Package 1	PCE
Number of Units in Package 1	1
Package 1 Weight	60.0 g
Package 1 Height	3.144 cm
Package 1 width	7.367 cm
Package 1 Length	8.576 cm
Unit Type of Package 2	CAR
Number of Units in Package 2	48
Package 2 Weight	3.131 kg
Package 2 Height	14.1 cm
Package 2 width	29.6 cm
Package 2 Length	40 cm

Offer Sustainability

EU RoHS Directive	Pro-active compliance (Product out of EU RoHS legal scope) EU RoHS Declaration
Mercury free	Yes
RoHS exemption information	Yes

Contractual warranty

Warranty	18 months

Product datasheet XUM8ANCNL2

Dimensions Drawings

Dimensions

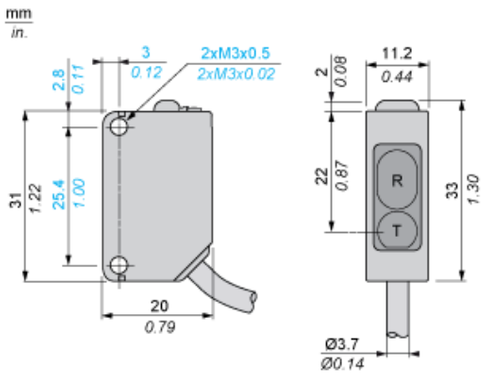

R : Reception
T : Transmission

Product datasheet XUM8ANCNL2

Mounting and Clearance

Mounting

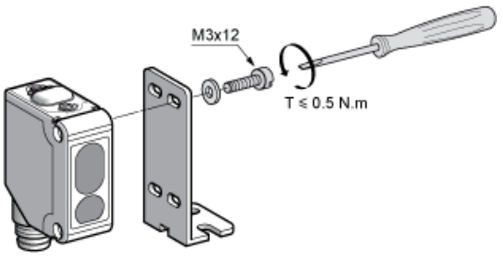

Wiring Schemes

NPN Output

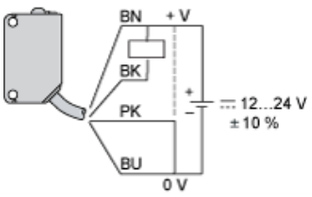

(-) BU : Blue
(+) BN : Brown
(OUT) BK: Black
(MODE) PK: Pink
Note : This scheme is represented in "background suppression" mode, cabling of pink (PK) wire to 0 V

Product datasheet XUM8ANCNL2

Performance Curves

Detection Curves

Variation of Usable Sensing Distance

Minimum Setting

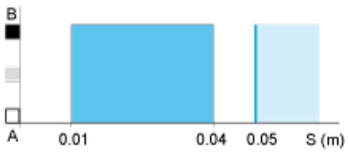

Maximum Setting

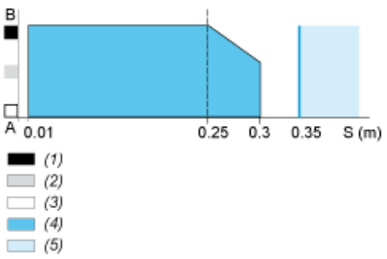

A-B : Object reflection coefficient
(1) Black 6%
(2) Grey 18%
(3) White 90%
(4) Sensing range
(5) Non sensing zone (matt surfaces)