SY 20 TF/VA228

Plummer block ball bearing units, for high temperature applications

Bearing data

Radial internal clearance, table

Technical specification

Running in required	No

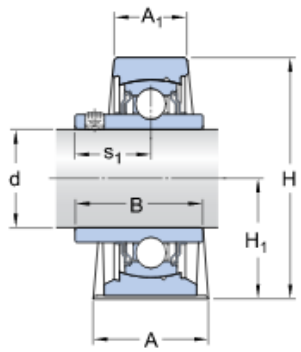

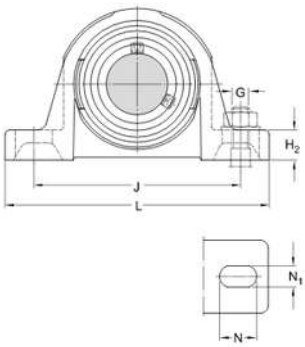

DIMENSIONS

d	20 mm
A	32 mm
A_1	21 mm
B	31 mm
H	64.5 mm
H_1	33.3 mm
H_2	14 mm
L	127 mm
J	97 mm
N	20.5 mm
N_1	11.5 mm
s_1	18.3 mm

CALCULATION DATA

Basic dynamic load rating	C	12.7 kN
Basic static load rating	C_0	6.55 kN
Limiting speed		260 r/min

MASS

Mass bearing unit	0.56 kg

MOUNTING INFORMATION

Grub (set) screw	G_2	M6x0.75
Hexagonal key size for grub screw	N	3 mm
Recommended tightening torque for grub screw		4 N·m
Attachment bolts, recommended metric size	G	10 mm
Attachment bolts, recommended inch size	G	0.375 in

INCLUDED PRODUCTS

Bearing	YAR 204-2F/VA228

Product details

- Deep groove ball bearings for high temperature applications
- Insert bearings and ball bearing units for high temperature applications
- Bearing data
- Loads and selecting bearing size
- Design considerations
- Relubrication and running in
- Mounting
- Designation system

Engineering information

- Principles of rolling bearing selection
- General bearing knowledge
- Bearing selection process
- Bearing interfaces
- Seat tolerances for standard conditions
- Sealing, mounting and dismounting
- Bearing failure and how to prevent it

Tools

- Engineering Calculator
- SimPro Quick
- Heater selection tool
- Rolling bearings mounting and dismounting instructions

Terms and conditions

By accessing and using this website / app of SKF Group, meaning AB SKF and / or any of its affiliates ("SKF"), you agree to the following terms and conditions:

Warranty Disclaimer and Limitation of Liability

Although every care has been taken to assure the accuracy of the information on this website / app, SKF provides this information "AS IS" and DISCLAIMS ALL WARRANTIES, EXPRESS OR IMPLIED, INCLUDING, BUT NOT LIMITED TO, IMPLIED WARRANTIES OF MERCHANTABILITY AND FITNESS FOR A PARTICULAR PURPOSE. You acknowledge that your use of this website / app is at your sole risk, that you assume full responsibility for all costs associated with use of this website / app, and that SKF shall not be liable for any direct, incidental, consequential, or indirect damages of any kind arising out of your access to, or use of the information or software made available on this website / app. Any warranties and representations in this website / app for SKF products or services that you purchase or use will be subject to the agreed upon terms and conditions in the contract for such product or service. Further, for non-SKF websites / apps that are referenced in our website / app or where a hyperlink appears, SKF makes no warranties concerning the accuracy or reliability of the information in these websites / apps and assumes no responsibility for material created or published by third parties contained therein. In addition, SKF does not warrant that this website / app or these other linked websites / apps are free from viruses or other harmful elements.

Copyright

Copyright in this website / app copyright of the information and software made available on this website / app rest with SKF or its licensors. All rights are reserved. All licensed material will reference the licensor that has granted SKF the right to use the material. The information and software made available on this website / app may not be reproduced, duplicated, copied, transferred, distributed, stored, modified, downloaded or otherwise exploited for any commercial use without the prior written approval of SKF. However, it may be reproduced, stored and downloaded for use by individuals without prior written approval of SKF. Under no circumstances may this information or software be supplied to third parties.

This website /app includes certain images used under license from Shutterstock, Inc.

Trademarks and Patents

All trademarks, brand names, and corporate logos displayed on the website / app are the property of SKF or its licensors, and may not be used in any way without prior written approval by SKF. All licensed trademarks published on this website / app reference the licensor that has granted SKF the right to use the trademark. Access to this website / app does not grant to the user any license under any patents owned by or licensed to SKF.

Changes

SKF reserves the right to make changes or additions to this website / app at any time.