128, av. du Maréchal-de-Lattre-de-Tassigny - 87045 LIMOGES Cedex
Tel. : 33(0)5 55 06 87 87 - Fax : 33(0)5 55 06 88 88
www.legrand.com

GREEN-I

Catalogue Number(s): 0 484 58/59

GI-ISW/GI-ISG
WALL IP55 ON-OFF LIGHTING CONTROL SENSOR

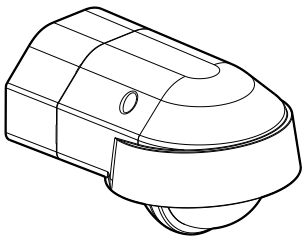

0 484 58 (White)
0 484 59 (Graphite)

CONTENTS

1. USE 1
2. TECHNICAL CHARACTERISTICS 1
3. DIMENSIONS 2
4. CONNECTION 2
5. INSTALLATION 4
6. SETTINGS 6
7. COVERAGE PERFORMANCE 8
8. FONCTIONNEMENT 8
9. MAINTENANCE 9
10. STANDARDS 9

1. USE

This device is used to control a light source automatically by detecting movement, using infrared (IR) technology. This IP55 motion sensor has a 140° detection angle, and when positioned 2.5m above the ground an 10m×14m detection area. It is surface-mounted on walls. It is quick and easy to set, using potentiometers or an IR remote control (0 484 75)

Detection type: Infrared (PIR)
Mounting type: Wall
Time Delay: 10sec to 30min
Light Level Setpoint: 5. . . 2000lux

2. TECHNICAL CHARACTERISTICS

2.1 Technical data

Voltage: 100-240V ~
Frequency: 50 / 60 Hz
No-load power consumption: 0.1W
Output by normally open contact connected to phase
Cabling: 2x1,5mm² or 1x2,5mm²
Flush-mounting diameter: 67 mm
Weight: 188.05g
Impact resistance: IK04
Penetration by solid bodies and liquids: IP55
Operating temperature: -5°C to +30°C
Storage temperature: -20°C to +70°C

2.2 Features

- Operates in standalone.
- 1 auxiliary input for overriding lightings using a push button connected to the line.
- 1 sensor (pyroelectric technology) with its lens for sensing movement.
- A daylight sensor measuring the natural and artificial light for driving lightings according to the daylight setpoint.
- 1 relay output dedicated to lightings, switching loads at the zero crossing.
- An Infrared protocol to configure.
  - Time delay
  - Light level setpoint
  - Launch test mode
  - PIR Sensitivity

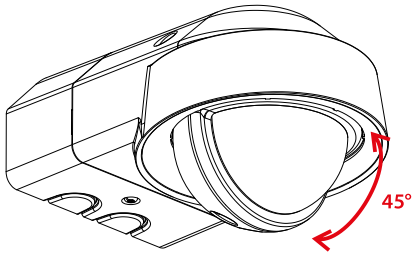

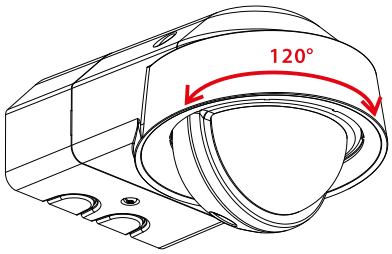

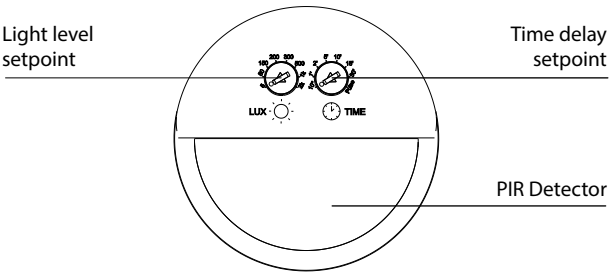

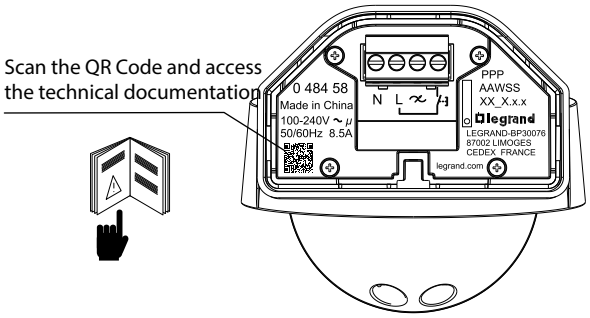

GI-ISW/GI-ISG
WALL IP55 ON-OFF LIGHTING CONTROL SENSOR

2. TECHNICAL CHARACTERISTICS (Continued)

■ 2.3 Load

①			②		③		④		⑤	⑥		⑦	
									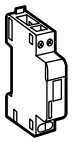			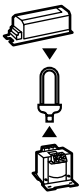	
LED												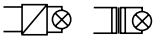	
240 V~	350 V~	cos φ 0,5	2000 W	cos φ 1	1000 V~	cos φ 1	10x(2x36W)	cos φ 1	I ≤ 2 A	500 V~	cos φ 1	1000 V~	cos φ 1
100 V~	175 V~		1000 W		500 V~		5x(2x36W)			250 V~		500 V~	

1- LED lamp
2- Incandescent and Halogen lamps
3- Halogen lamp with separate ferromagnetic or electronic transformer
4- Fluorescent tubes
5- Contactor
6- Compact fluorescent lamp with integrated ballast
7- Compact fluorescent lamp with transformer ferromagnetic or separate electronic

3. DIMENSIONS

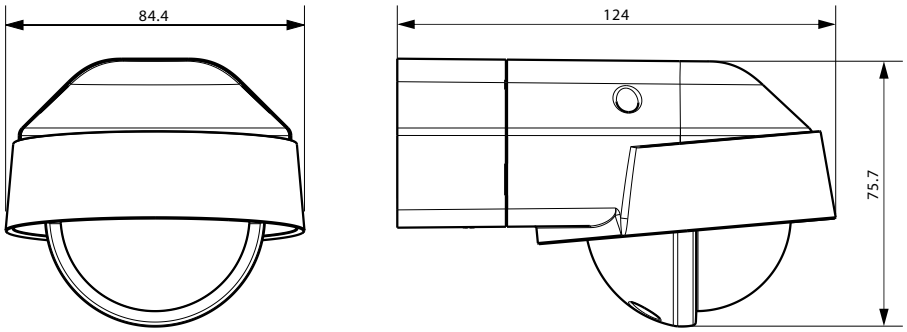

4. CONNECTION

Number of terminals: 4
Terminal type: pluggable terminal
Terminal capacity: 2 × 1.5mm² or 1 × 2.5mm²
Stripping length: 7 mm

■ 4.1 Wiring with auxiliary control

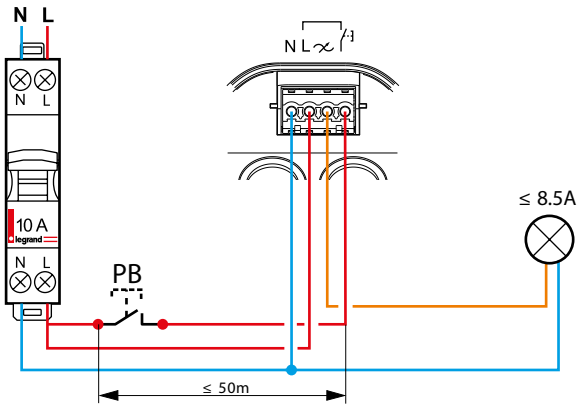

GI-ISW/GI-ISG
WALL IP55 ON-OFF LIGHTING CONTROL SENSOR

4. CONNECTION (Continued)

■ 4.2 Wiring without auxiliary control: Auto on/Auto off

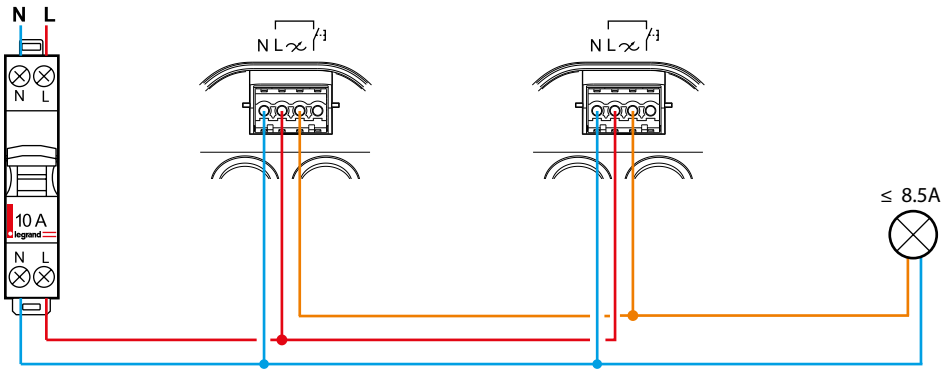

■ 4.3 Wiring for a single load connected in parallel

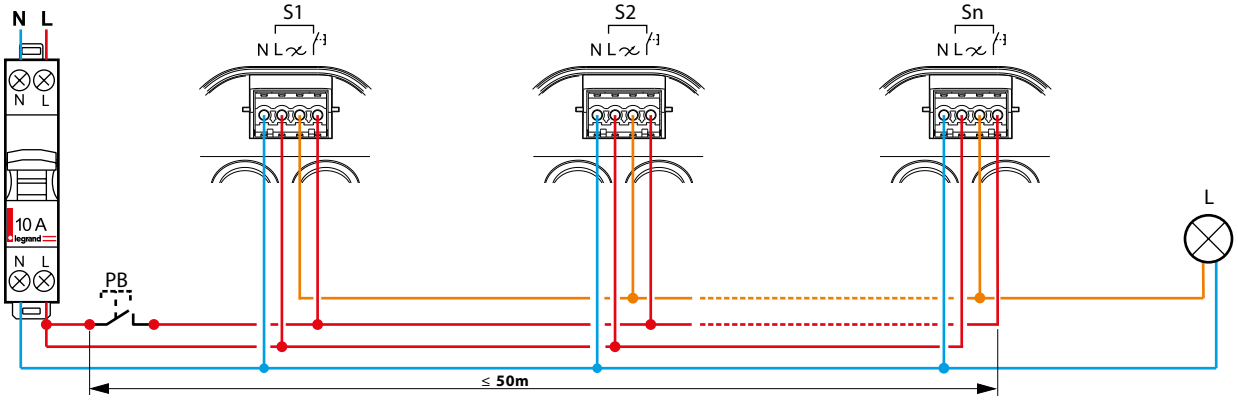

■ 4.4 Wiring for several loads connected in parallel

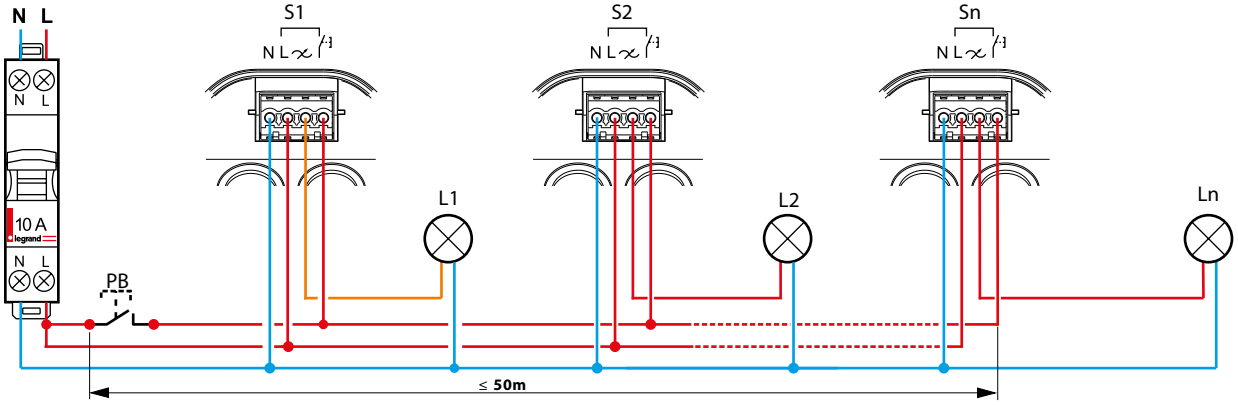

■ 4.5 Wiring with timer

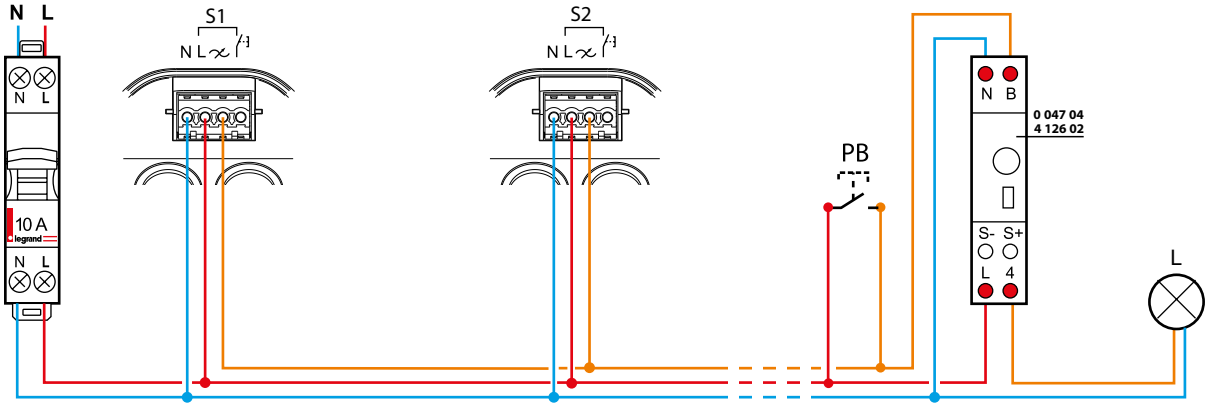

GI-ISW/GI-ISG
WALL IP55 ON-OFF LIGHTING CONTROL SENSOR

5. INSTALLATION

5.1 Positioning the sensor

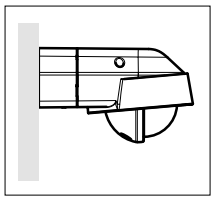

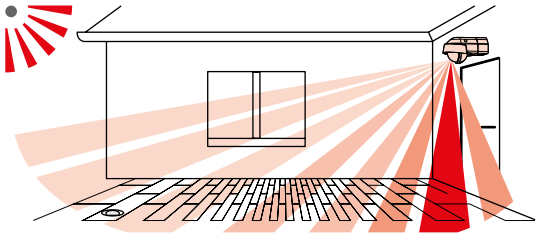

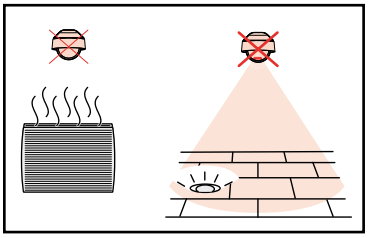

5.2 Positioning

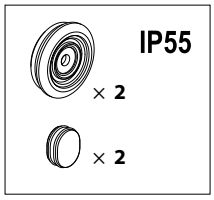

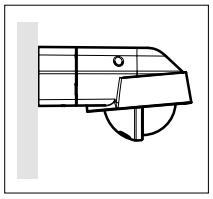

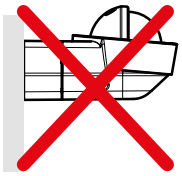



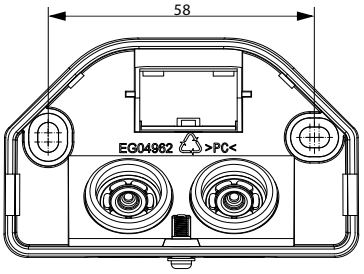

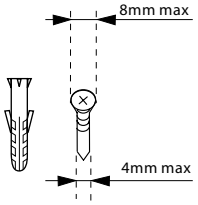

5.3 Installation

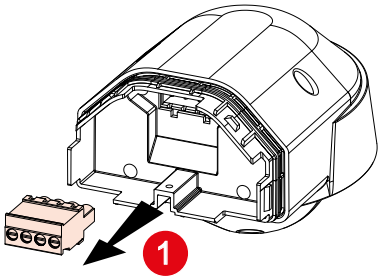

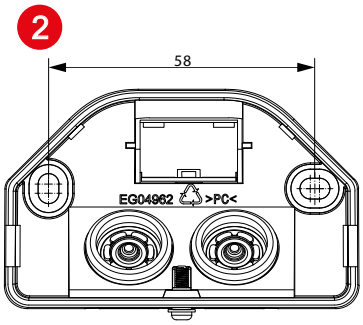

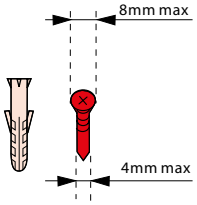

GI-ISW/GI-ISG
WALL IP55 ON-OFF LIGHTING CONTROL SENSOR

5. INSTALLATION (Continued)

■ 5.3 Installation (continued)

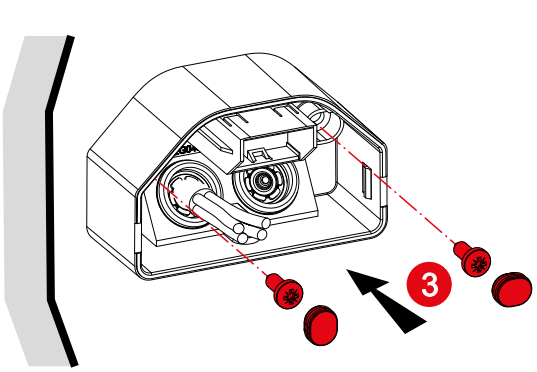

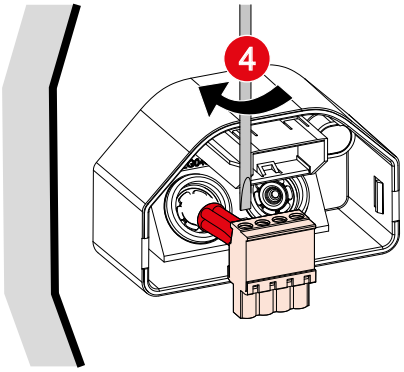

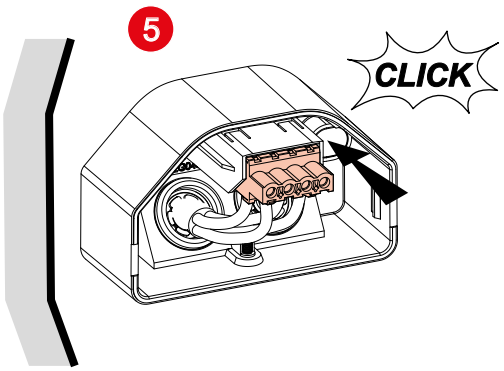

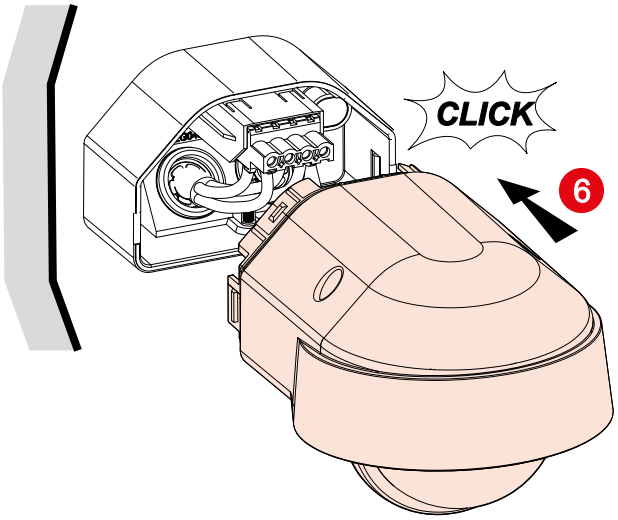

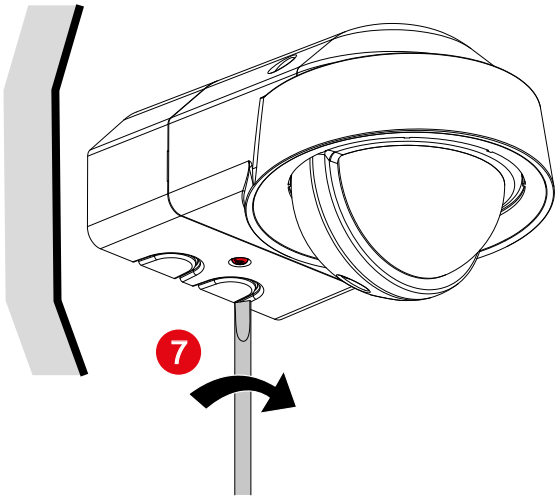

GI-ISW/GI-ISG
WALL IP55 ON-OFF LIGHTING CONTROL SENSOR

6. SETTINGS

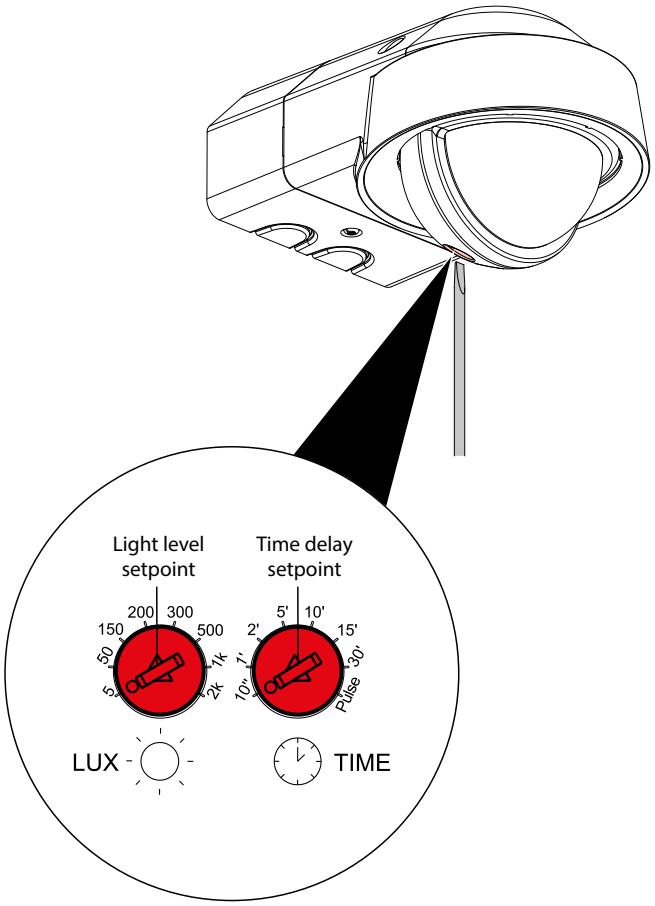

■ 6.1 Setting by Trimmer

The product is set with this trimmer's positions.
Time delay setpoint: Time for which light is switched on following detection.
Light level setpoint: Light level setpoint value below which the light is switched on and above which the light is switched off.

Position	Trimmer daylight	Trimmer time delay
1	5 lux (Min)	10 sec
2	50 lux	1 min
3	150 lux	2 min
4	200 lux	5 min
5	300 lux	10 min
6	500 lux	15min
7	1000 lux	30 min
8	2000 lux (Max)	Pulse

Light level Max: Light will always be turn on/off no matter light level.
Pulse: The relay output is driven with short pulse (1s) spaced to 10s for driving a timer lag switch. Combined with a remote time-switch, the detector is ideal for stairwells and corridors.
The time set on the time switch determines how long the load is switched on following a signal detection.
Factory Settings:
Trimmer daylight: position 8 (max)
Trimmer time delay: position 1 (10sec)

6. SETTINGS (Continued)

■ 6.2 Setting by Infrared remote control (Cat. N° 0 484 75)

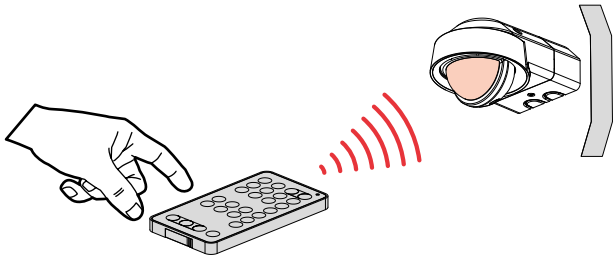

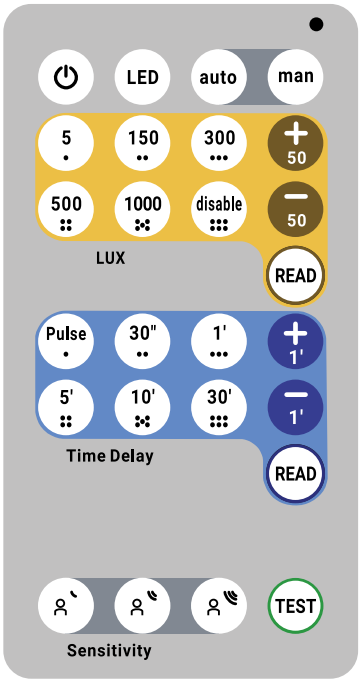

Notes 1: Auto on/Auto off mode:
Automatic switch-on:
- On detection of presence if the natural light level is insufficient.
Automatic switch-off:
- If no presence is detected and at the end of the set time delay
- Or if the natural light level is sufficient
Another detection causes automatic switch-on if there is insufficient light.

Notes 2: Manual on/Auto off mode:
Manual switch-on, automatic switch-off:
- When no presence is detected and at the end of the set time delay. After switch-off, any new detection within a 30 second period triggers an automatic switch-on.
After 30 seconds the device is switched on via a manual switch.

Note 3: Test Mode:
This mode bypass parameters for 10 minutes.
Every detection switch ON the motion LED (in purple) for 1sec and drives the lightings for 5 seconds.
After these 5seconds, if no motion is sensed, the lightings turn OFF, else the 5 seconds delay is refreshed (test mode restarts).
The 10 minutes test timer is reset only if remote control test button is pushed again.

GI-ISW/GI-ISG
WALL IP55 ON-OFF LIGHTING CONTROL SENSOR

6. SETTINGS (Continued)

6.2 Setting by Infrared remote control (continued)

TYPE	KEY	NAME	DESCRIPTION	Comment
Parameter		Load ON/OFF	Turn ON/OFF the connected loads	After the setting is successful, the purple LED on the product blinks quickly three times.
		Motion LED ON/OFF	Enables or Disables the motion detection LED (green)	
		Auto ON Auto OFF	The load will be switched on and off automatically	
		Manuel ON Auto OFF	Manual switching on by pressing the push button / Automatic switching off at the end of the timer period	
Light level Setpoint		5 LUX	Set light level to 5 LUX	
		150 LUX	Set light level to 150 LUX	
		300 LUX	Set light level to 300 LUX	
		500 LUX	Set light level to 500 LUX	
		1000 LUX	Set light level to 1000 LUX	
		Disable light level Regulation	Light will always be turn on/off no matter light level	
		Read light level	Upon activation the sensor yellow LED will blink «x» times to indicate the set values for LUX	Exemple : the sensor's LED blinks yellow 3 times = light level is set to 300 LUX or the closest value (250 or 350 LUX).
		Increase 50 lux	Increase by 50 LUX the set LUX level (maximum value when pressing '+' is 2000 LUX)	
		Decrease 50 lux	Decrease by 50 LUX the set LUX level	
Time delay		Pulse	Activate the pulse function on the sensor	
		30 seconds	Set time delay to 30s	
		1 minute	Set time delay to 1min	
		5 minute	Set time delay to 5min	
		10 minute	Set time delay to 10min	
		30 minute	Set time delay to 30min	
		Read time delay	Upon activation the sensor blue LED will blink «x» times to indicate the set values for time delay	Exemple : the sensor's LED blinks blue 4 times = time delay is set to 5minutes or closest value (4 min or 6 min).
		Increase 1 minute	Increase by 1min the set the time delay (maximum value when pressing '+' is 60 min)	
		Decrease 1 minute	Decrease by 1min the set the time delay	
Senstivity	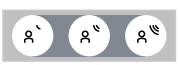	PIR sensitivity	1.Low 2.Medium 3.High	Factory settings: medium
Test Mode		Test Mode	Test mode is activated during 10min and the time delay is 5s.	Temporary sets values to : LUX disabled Delay 5s After test period, values return to their original settings and the test can be interrupted by pushing the button once more.

GI-ISW/GI-ISG
WALL IP55 ON-OFF LIGHTING CONTROL SENSOR

6. SETTINGS (Continued)

■ 6.3 Pilot lamp feedback

Motion LED feedback:

STATE	DESCRIPTION
● For 45s	Warmup state (state after power ON)
● For 1s	Motion sensed
● For 1s	Motion sensed during test mode

Read mechanism feedback

STATE	DESCRIPTION
● Blink	Blinks X times to indicate the set values for TIME DELAY triggered by READ function.
● Blink	Blinks X times to indicate the set values for LUX triggered by READ function.

IR frame ACK feedback:

STATE	DESCRIPTION
● 3 blinks	Blinks quickly 3 times anytime a message is received from remote
● 3 blinks	Blinks quickly 3 times when the message coming from the remote cannot be taken into account

■ 6.4 WARM UP

When powered on the motion sensor is in warmup state for 45s:
Load is ON;
Green Motion LED is ON;
AUX functions is active;
Infrared remote control/trimmer settings are active;
PIR Sensor is inactive;
LUX level sensing is inactive;

7. COVERAGE PERFORMANCE

■ 7.1 Radial movement

Factory setting: "Medium Sensitivity" for a height of 2.5m and a temperature of 20 °C.

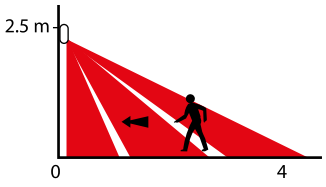

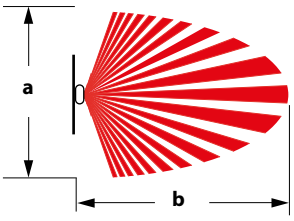

Height (m)	Sensitivity Low		Sensitivity Medium		Sensitivity High	
	a (m)	**b** (m)	**a** (m)	**b** (m)	**a** (m)	**b** (m)
2.5	2	3	3	4	4	8.5
3.5	3	2.5	5	3	7	4
4	4	3	4	4	5	4.5

7. COVERAGE PERFORMANCE (Continued)

■ 7.2 Tangential movement

Factory setting: "Medium Sensitivity" for a height of 2.5m and a temperature of 20 °C.

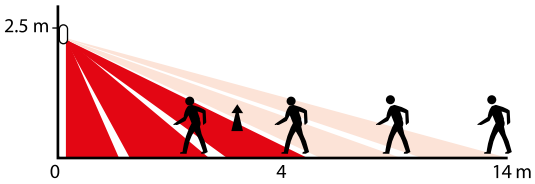

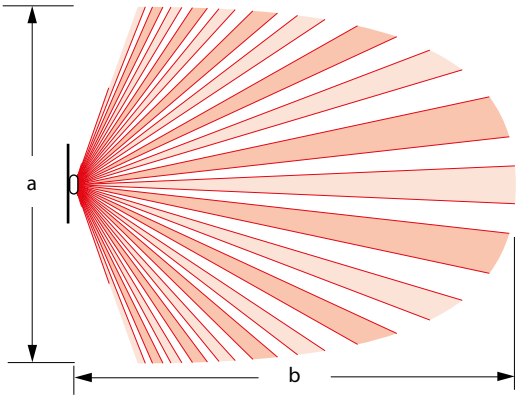

Height (m)	Sensitivity Low		Sensitivity Medium		Sensitivity High	
	a (m)	**b** (m)	**a** (m)	**b** (m)	**a** (m)	**b** (m)
2.5	6	13	10	14	11	14.5
3.5	6	14.5	7	14.5	8	14.5
4	7	9	10	14.5	16	14.5

Remark:
For an optimal trigger, the movement must be done perpendicular to the detector. In case direct and frontal approach, the detection of a movement will be harder, and scope will be therefore much lower.

8. FONCTIONNEMENT

■ 8.1 More than one sensor and more than one load

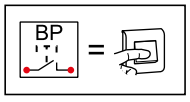

inversion of the state of the loads: < 1s

synchronisation of all loads to ON: > 1s

synchronisation of all loads to OFF: > 1s + < 1s

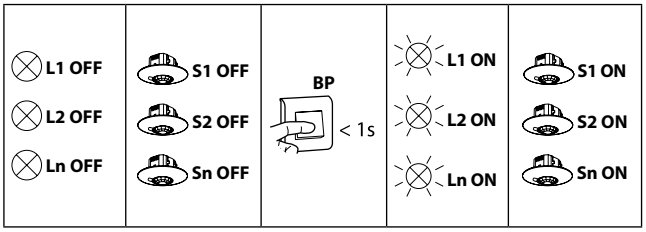

GI-ISW/GI-ISG
WALL IP55 ON-OFF LIGHTING CONTROL SENSOR

8. FONCTIONNEMENT (Continued)

■8.1 More than one sensor and more than one load (continued)

L1 ON L2 ON Ln ON	S1 ON S2 ON Sn ON	BP < 1s	L1 OFF L2 OFF Ln OFF	S1 OFF S2 OFF Sn OFF
L1 ON L2 OFF Ln OFF	S1 ON S2 OFF Sn OFF	BP < 1s	L1 OFF L2 ON Ln ON	S1 OFF S2 ON Sn ON
L1 ON L2 OFF Ln OFF	S1 ON S2 OFF Sn OFF	BP > 1s + < 1s	L1 OFF L2 OFF Ln OFF	S1 OFF S2 OFF Sn OFF
L1 ON L2 OFF Ln OFF	S1 ON S2 OFF Sn OFF	BP > 1s	L1 ON L2 ON Ln ON	S1 ON S2 ON Sn ON

■8.2 Several sensors connected to a single load

L OFF	S1 OFF S2 OFF Sn OFF	BP < 1s	L ON	S1 ON S2 ON Sn ON
L ON	S1 ON S2 ON Sn ON	BP < 1s	L OFF	S1 OFF S2 OFF Sn OFF
L ON	S1 ON S2 OFF Sn OFF	BP < 1s	L ON	S1 OFF S2 ON Sn ON
L ON	S1 ON S2 OFF Sn OFF	BP > 1s + < 1s	L OFF	S1 OFF S2 OFF Sn OFF

8. FONCTIONNEMENT (Continued)

■8.2 Several sensors connected to a single load (continued)

L ON	S1 ON S2 OFF Sn OFF	BP > 1s	L ON	S1 ON S2 ON Sn ON

9. MAINTENANCE

Ensure the lens remains clean.
Surface cleaning using a cloth.
Do not use: acetone, tar remover, trichloroethylene.
Resistant to the following products:

- Hexane (EN 60669-1),
- Methylated spirit,
- Soapy water,
- Diluted ammonia
- Bleach diluted to 10%,
- Window cleaning products.

WARNING: Conduct preliminary tests before using any other specific cleaning products.

10. STANDARDS

LVD: Low Voltage Directive
Directive: 2014/35/EU
Standard: IEC 60669-2-1

EMC: Electromagnetic Compatibility
Directive: 2014/30/EU
Product standards: IEC 60669-2-1
IEC 61000-3-2

ROHS: Restriction of Hazardous substances,
Directive:2011/65/EU of 08 June 2011 amended by 2015/862 of 31 March 2015 (ROHS 2)
Standard: EN IEC63000