A131 High level audible warning system

The A131 is a high output 131dB(A) @ 1 metre electronic siren in a compact and easy to install package. Using up to four speakers, it can be mounted in a variety of ways for applications with sound coverage requirements up to 300m.

The A131 modular system is ideal as a plant alarm to cover outdoor locations, areas with high background noise or smaller COMAH (Seveso II) applications. Offering a choice of three alarm stages, selected from a choice 45 tones including many national standard tones, it can be incorporated in fire, security and general alarm systems where existing equipment is not powerful enough or the system needs expanding.

Features

The A131 has the option of battery back up which means it can deliver it's safety warning even in the event of a power failure, for up to 30 days in standby and 30 minutes in alarm. The siren features 45 alarm tone frequencies and a total of 3 remotely activated alarm stages.

Approvals

- GOST-R certificate: POCC GB.JB05.H00144



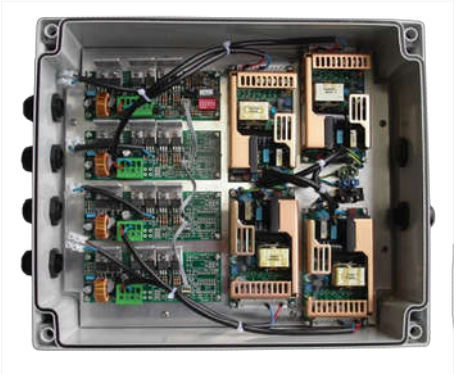

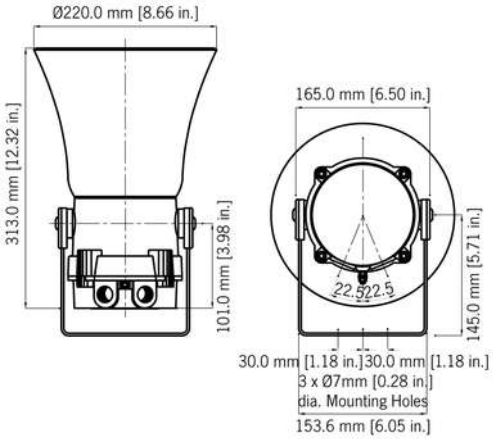

Specification

Horn unit:	
Output:	131dB(A) @ 1m (Tone 2 at nominal voltage +/- 3dB(A)) 102db(A) @ 30m
Operating temp:	-20°C to +55°C [-13° to +131°F]
Weight:	4.7Kg/10.34lbs per horn
Horn body Material:	Aluminium LM6 phosphated & powder coated
Horn flare material:	UL94 V0 & 5VA ABS
Colour:	Grey
Ingress protection:	IP66
Connection:	Supplied with 10m of cable for connection to the control unit as standard. Custom lengths available.
Mounting:	Adjustable U bracket.
Control Panel:	
Input voltage DC:	24V dc (18V dc to 30V dc range)
Input voltage AC:	115 or 230V ac (90V to 264V ac range)
Terminals:	0.5 to 4.0mm² cable
Operating temp:	-20°C to +55°C [-13° to +131°F]
Ingress protection:	IP65
Weight:	1.5kg/3.3lbs 1 Horn AC unit 2.9Kg/6.38lbs 4 Horn AC unit

Part Codes

Version:	Voltage:	Range:	Part code:	Current:
1 Horn	24V dc	18-30V dc	A131DC24G1	3.20A
1 Horn	115V ac	90-264V ac	A131AC230G1	0.78A
1 Horn	230V ac	90-264V ac	A131AC230G1	0.39A
2 Horns	24V dc	18-30V dc	A131DC24G2	6.50A
2 Horns	115V ac	90-264V ac	A131AC230G2	1.60A
2 Horns	230V ac	90-264V ac	A131AC230G2	0.78A
3 Horns	24V dc	18-30V dc	A131DC24G3	9.80A
3 Horns	115V ac	90-264V ac	A131AC230G3	3.90A
3 Horns	230V ac	90-264V ac	A131AC230G3	1.50A
4 Horns	24V dc	18-30V dc	A131DC24G4	13.2A
4 Horns	115V ac	90-264V ac	A131AC230G4	4.20A
4 Horns	230V ac	90-264V ac	A131AC230G4	1.95A

Other voltages available on request.

Tone table

S 1	Description
T 1	340 Hz Continuous
T 2	800/1000Hz @ 0.25 sec Alternating
T 3	500/1200Hz @ 0.3Hz 0.5 sec Slow Whoop
T 4	800/1000Hz @ 1Hz Sweeping
T 5	2400Hz Continuous
T 6	2400/2900Hz @ 7Hz Sweeping
T 7	2400/2900Hz @ 1Hz Sweeping
T 8	500/1200/500Hz @ 0.3Hz Sweeping
T 9	1200/500Hz @ 1Hz - DIN / PFEER P.T.A.P.
T 10	2400/2900Hz @ 2Hz Alternating
T 11	1000Hz @ 1Hz Intermittent
T 12	800/1000Hz @ 0.875Hz Alternating
T 13	2400Hz @ 1Hz Intermittent
T 14	800Hz 0.25sec on, 1 sec off Intermittent
T 15	800Hz Continuous
T 16	660Hz 150mS on, 150mS off Intermittent
T 17	544Hz (100mS)/440Hz (400mS) - NF S 32-001
T 18	660Hz 1.8sec on, 1.8sec off Intermittent
T 19	1.4KHz-1.6KHz 1s, 1.6KHz-1.4KHz 0.5s -NFC48-265
T 20	660Hz Continuous
T 21	554Hz/440Hz @ 1Hz Alternating
T 22	544Hz @ 0.875 sec. Intermittent
T 23	800Hz @ 2Hz Intermittent
T 24	800/1000Hz @ 50Hz Sweeping
T 25	2400/2900Hz @ 50Hz Sweeping
T 26	Bell
T 27	554Hz Continuous
T 28	440Hz Continuous
T 29	800/1000Hz @ 7Hz Sweeping
T 30	300Hz Continuous
T 31	660/1200Hz @ 1Hz Sweeping
T 32	Two T chime.

S 1	Description
T 33	745Hz @ 1Hz Intermittent
T 34	1000 & 2000Hz @ 0.5 sec Alternating - Singapore
T 35	420Hz @ 0.625 sec Australian Alert
T 36	500-1200Hz 3.75sec /0.25sec. Australian Evac.
T 37	1000Hz Continuous - PFEER Toxic Gas
T 38	2000Hz Continuous
T 39	800Hz 0.25sec on, 1 sec off Intermittent
T 40	544Hz (100mS)/440Hz (400mS) - NF S 32-001
T 41	Motor Siren - slow rise to 1200 Hz
T 42	Motor Siren - slow rise to 800 Hz
T 43	1200 Hz Continuous
T 44	Motor Siren - slow rise to 2400 Hz
T 45	1KHz 1s on, 1s off Intermittent - PFEER Gen. ...

No liability is accepted for any consequence of the use of this document. The technical specification of this unit is subject to change without notice due to our policy of continual product development. All dimensions are approximate. This unit is sold subject to our standard conditions of sale, a copy of which is available on request.