THE INFORMATION CONTAINED IN THIS DRAWING IS THE SOLE PROPERTY OF L-COM, INC. ANY REPRODUCTION IN PART OR WHOLE WITHOUT THE WRITTEN PERMISSION OF L-COM, INC. IS PROHIBITED.

REVISIONS

REV	DESCRIPTION	DATE	APPROVED
A	Initial Release	05/08/03	P.Pesa
B	Updated Body Dims. ECN#4286	09/25/09	B Puchaski
C	Updated Format and Text ECN#4355	11/05/09	B Puchaski

DESCRIPTION	MATERIAL	FINISH
CENTER CONTACTS	BRASS	GOLD
OUTER CONTACT	BRASS	NICKEL
INSULTOR	TEFLON	---
LOCK WASHER	BRASS	NICKEL
NUT	BRASS	NICKEL

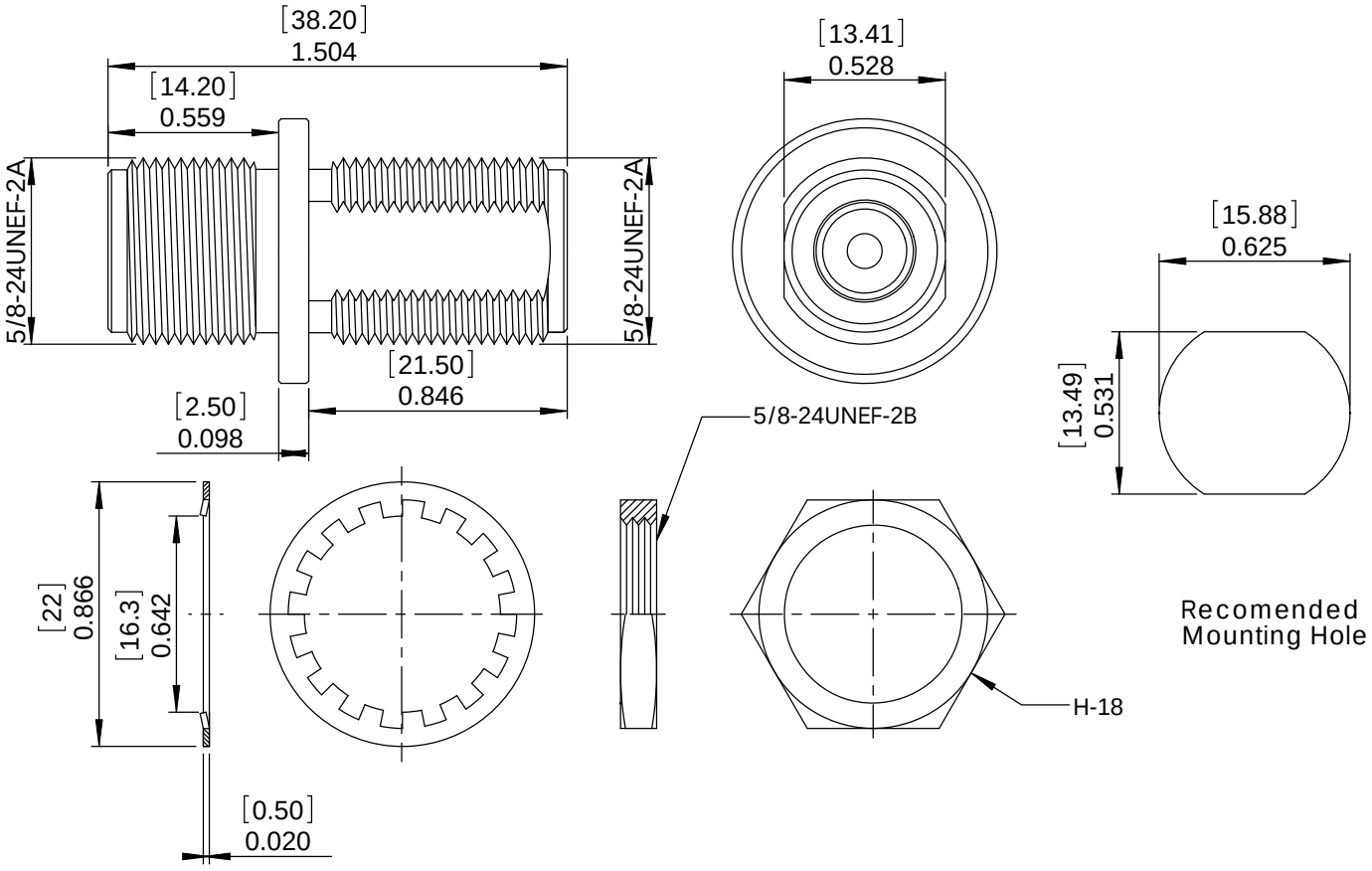

NOTES:

ELECTRICAL:
IMPEDENCE: 50 OHMS
WITHSTAND VOLTAGE: 1500V
FREQUENCY RANGE: 0~11 GHz
INSERTION LOSS: .15 dB Max.

MISCELLANEOUS:
COMPONENTS SHALL BE INDIVIDUALLY PACKAGED IN ACCORDANCE WITH L-COM SPECIFICATIONS PS-0031.

ALL DIMENSIONS ARE FOR REFERENCE ONLY.

UNLESS OTHERWISE SPECIFIED, DIMENSIONS ARE IN INCHES [mm]

DIMENSIONAL TOLERANCES:
.X = ±.1
.XX = ±.01
.XXX = ±.005

ANGULAR TOLERANCES:
ALL = ± 1°

PROJECTION

APPROVALS	DATE
DRAWN BY B.Puchaski	09/25/09
CHECKED BY M.Audas	09/25/09
APPROVED BY M.Audas	09/25/09

CONFIGURATION DETAILS OF UNDIMENSIONED FEATURES MAY VARY

COLOR VARIATIONS MAY OCCUR

L-COM Global Connectivity
45 BEECHWOOD DRIVE
NORTH ANDOVER, MA
01845

CATEGORY
CONNECTOR

PRODUCT DESCRIPTION
Adapter: N-Female to N-Female Bulkhead for 1/8" [3.25mm] Chasis

SIZE	FSCM NO.	DWG. NO.	REV.
A	43321	AXA-NFNFB	C

SCALE: NONE | CAD FILE: AXA-NFNFB.SLDDRW | SHEET 1 OF 1