8LB6BP03

FIXING BASE FOR LIGHT MODULES. Ø62MM, HORIZONTAL SURFACE MOUNT, PLASTIC, BLACK COLOUR



Product designation		Fixing bases for light signal beacons Ø62mm/2.44"
Product type designation		8LB6BP03
General characteristics		
Diameter	mm - inch	62 / 2.44
Colour		Black
Material		Plastic
Mechanical features		
Weight	g	40
Dimensions		

The characteristics described in this document are subject to updates or modifications at any time. The descriptions, technical and functional information, illustrations and instructions in this brochure are purely illustrative, and are consequently not contractually binding

8LB6BP03

FIXING BASE FOR LIGHT MODULES. Ø62MM, HORIZONTAL SURFACE MOUNT, PLASTIC, BLACK COLOUR

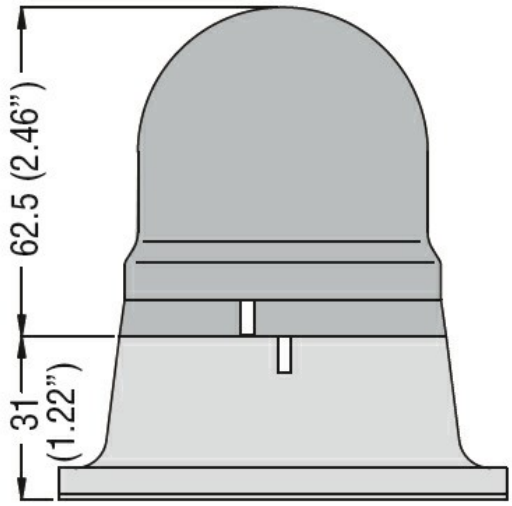

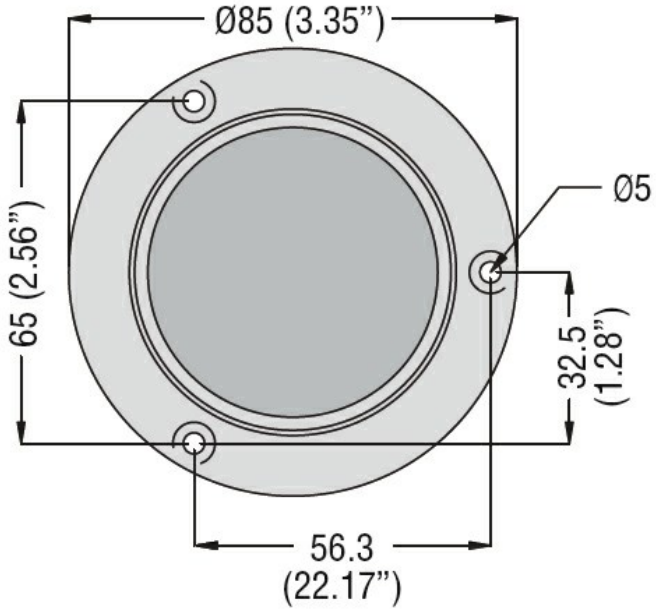

Certifications and compliance

Compliance

/

Certificates

/

ETIM classification

ETIM 8.0	EC001154 - Stand for signal tower without tube

The characteristics described in this document are subject to updates or modifications at any time. The descriptions, technical and functional information, illustrations and instructions in this brochure are purely illustrative, and are consequently not contractually binding