THE INFORMATION CONTAINED IN THIS DRAWING IS THE SOLE PROPERTY OF L-COM, INC. ANY REPRODUCTIONS IN PART OR WHOLE WITHOUT THE WRITTEN PERMISSION OF L-COM, INC. IS PROHIBITED.

REVISIONS			
REV	DESCRIPTION	DATE	CHANGED BY
A	DRAWING REPLACES DGBV15F-OD1	9/23/14	D.FRISIELLO

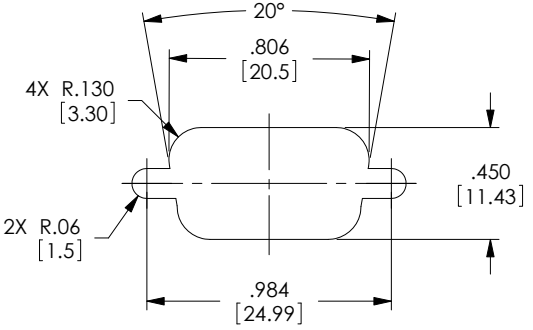

RECOMMENDED PANEL OPENING
(MAX PANEL THICKNESS: 0.06")

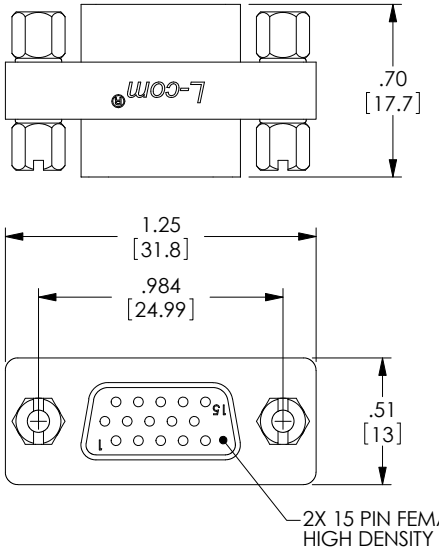

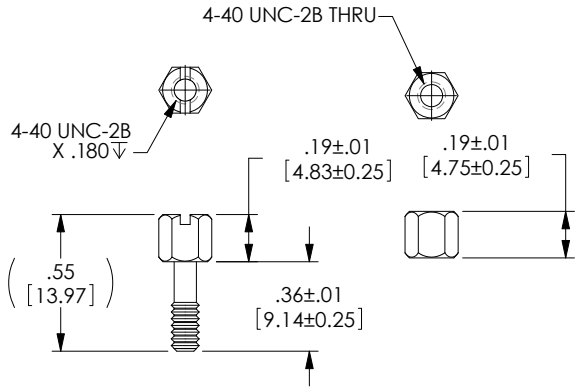

JACKSCREW & HEX STANDOFF
SPECIFICATION

NOTES:

MATERIAL:
SHELL: STEEL
CONTACTS: COPPER ALLOY
HARDWARE: BRASS
INSULATOR: PBT FIBER REINFORCED (UL94V-0 RATED)

FINISH:
SHELL: TIN/NICKEL PLATED
CONTACTS: GOLD FLASH PLATED
HARDWARE: NICKEL PLATED

ELECTRICAL:
CURRENT RATING: 3 AMP

MISCELLANEOUS:
OPERATING TEMPERATURE RANGE: -55°C TO +105°C.
PIN 9 IS OMITTED.
ALL CONTACTS ARE WIRED STRAIGHT THROUGH.
COMPONENT SHALL BE TESTED FOR CONTINUITY.

LABELING:
PANTONE 2945 BLUE. "L-COM" FONT MyriaMM ITALIC.
"GENDER CHANGER" FONT ARIAL BOLD, TEXT HEIGHTS; .085"
TEXT COLOR; WHITE.

PACKAGING:
COMPONENT SHALL BE INDIVIDUALLY PACKAGED IN ACCORDANCE WITH L-COM SPECIFICATION PS-0031.

REGULATORY COMPLIANCE:
CE2011/65/EU(RoHS DIRECTIVE)

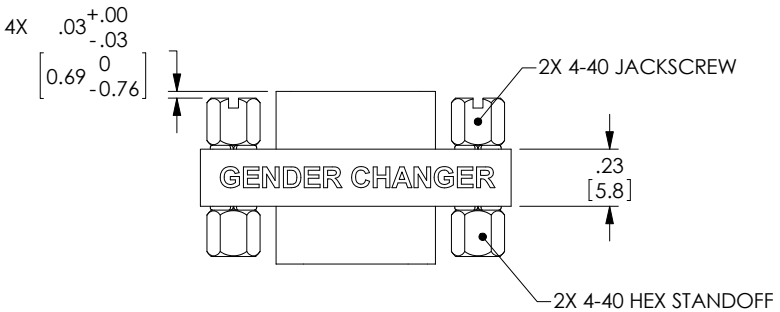

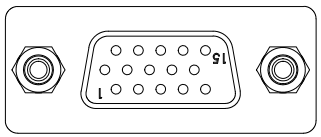

UNLESS OTHERWISE SPECIFIED, DIMENSIONS ARE IN INCHES [mm]
OVERALL CABLE LENGTH TOLERANCE:
≤12 [305] = +1 [25] / -0
>12 [305] ≤60 [1524] = +2[51] / -0
>60 [1524] ≤120 [3048] = +4 [102] / -0
>120 [3048] ≤300 [7620] = +4 [102] / -0
>300 [7620] = +3% / -0%
ALL OTHER DIMENSIONAL TOLERANCES:
X = ±.2 [5.08]
.XX = ±.02 [.51]
.XXX = ± .005 [.13]
PROJECTION

APPROVALS	DATE
DRAWN BY D.PARHAM	11/12/2001
CHECKED BY T.CLARK	11/12/2001
APPROVED BY R.CARRICK	11/13/2001

CONFIGURATION DETAILS OF UNDIMENSIONED FEATURES MAY VARY
COLOR VARIATIONS MAY OCCUR

L-COM Global Connectivity
45 BEECHWOOD DRIVE
NORTH ANDOVER, MA
01845

CATEGORY: D-SUBMINIATURE
PRODUCT DESCRIPTION: ADPT, VGA GNDR CHGR HD15F/F

SIZE	FSCM NO.	DWG. NO.	REV.
B	43321	DGBV15F	A

SCALE: 2:1 | CAD FILE: DGBV15F.SLDDRW | SHEET 1 OF 1